Monday, September 23, 2024

Introduction

Oula Steel is a leading Manufacturing Company in Kuwait's steel industry, recognized for its pioneering role as the first steel plant in the country to secure a license in the late 1990s for comprehensive integrated steel operations, including scrap processing and melting. Since its establishment in the fourth quarter of 2003, Oula Steel has been at the forefront of enhancing steel production capabilities within the GCC region. It achieved a notable milestone by becoming the first steel billet producer to cater to both local and regional markets. With the commissioning of our advanced rolling mill in 2023, we have expanded our capabilities to meet the growing demand for reinforced steel bars in the Kuwaiti market.

The company's operations are supported by a robust infrastructure featuring three integrated plant setups: scrap processing, melting, and rolling. This integrated approach ensures meticulous management of each production stage, maintaining the highest standards of quality assurance and delivering superior products to our clients.

Oula Steel takes pride in its exceptional quality control throughout all operational stages. From the initial processing of steel scrap through the precise melting processes to the final rolling of reinforced bars, every stage is conducted with an unwavering commitment to excellence. This stringent quality management system ensures that the steel products, including various grades and sizes of reinforced bars, adhere to the highest industry standards and consistently exceed client expectations.

As a cornerstone of the steel industry, Oula Steel Manufacturing Company remains dedicated to its mission of providing top-tier steel products and achieving utmost client satisfaction. The company’s enduring commitment to quality, innovation, and regional development continues to be the foundation of its operations, driving its significant contribution to the local and regional markets.

Prepared by:
Production Performance Engineer
Bebe Alawadhi

Reviewed by:
Quality Control Engineer
Youssef Alkandari

Monday, September 23, 2024

Billet Specifications:

1- Chemical Analysis

Steel Grade	Chemical Analysis %															
	C		Si		Mn		P	S	Ni	Cr	Cu	Mo	N	C_{eq}		
	min	max	min	max	min	max	max	max	max	max	max	max	max	min	Max	
Gr. 60	0.20	0.26	0.18	0.30	0.60	0.80	0.04	0.04	0.30	0.30	0.30	0.30	0.011	0.30	0.45	

2- Billet Specifications

Cross Section	Billet Length	Diagonal Length	Camber	Rhombadity $R\% = \frac{D1 - D2}{0.5 * (D1 + D2)} * 100$
130 x 130 mm	-0 + 100 mm	≤ 6 mm	$\leq \frac{6mm}{m} to\ 60mm\ Max$	3 % Max

Prepared by:
Production Performance Engineer
Bebe Alawadhi

Reviewed by:
Quality Control Engineer
Youssef Alkandari

BILLET SHAPE	
Length (WL)	WL ± 50mm
Rhomboid Difference in Diagonal Length /D1-D2/	3% max $R\% = \frac{D1-D2}{0.5*(d1+d2)} * 100$
BEND	
Bend in Whole Length and Bend in Part of Length (H)	Not more than 6mm in 1 meter Not more than 60mm in 12 meter
Bend per Meter ($\frac{H}{L}$)	$\frac{H}{L} \leq 10 \frac{mm}{m}$
BURR/DEFORMATION ON CUT ENDS	
A) If Torch/Gas Cut (B)	B ≤ 5mm
Twist (Torsion) (Θ) in Overall Length	$\Theta \leq 9^0$
Corner Radius (R)	6mm Mx

BILLET SURFACE CONDITIONING STANDARD (BY GRINDING OR MACHINING)		
ILLUSTRATION	**TOLERANCE**	
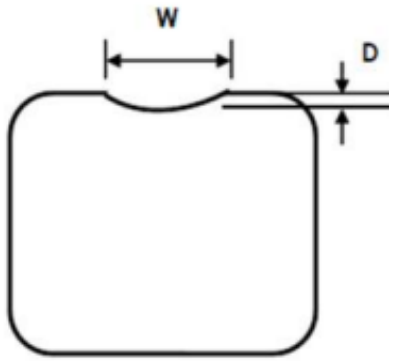	130 x 130	D = 5 mm max W = 6 x D min

Prepared by:
Production Performance Engineer
Bebe Alawadhi

Reviewed by:
Quality Control Engineer
Youssef Alkandari

3- Billets will be free from the following defects

Shape Defects		
Billet Defects	**Description**	**Standard / Specification**
Out of Squareness	Increase or decrease in the dimension due to incorrect cooling parameters or inadequate support of the skin against the ferrostatic pressure.	± 3mm of billet sides : HOLD / Conduct macro etching to assess internal defects
Rhomboidity	One diagonal of a square may be longer than the other. This is caused by the incorrect relationship between casting speed, tundish melt temperature, and cooling water flow rate.	3% Max : HOLD / Conduct macro etching to assess internal defects
Twist / Torsion	Caused by uneven cooling in the mold or by uneven secondary cooling on the different faces of the section.	A > 1^0 /m & A > 9^0 /12m : HOLD / Conduct macro etching to assess internal defects
Off Length	Increase or decrease in the desired length due to slippage in the sliding rolls.	L = 12 m ± 0.005 m : otherwise for cutting to suitable length
Bend / Camber	Caused by uneven cooling in the mold or in the secondary cooling zone.	$\frac{H}{L} > \frac{50\ mm}{12\ m}$: HOLD (130 x 130)

Prepared by:
Production Performance Engineer
Bebe Alawadhi

Reviewed by:
Quality Control Engineer
Youssef Alkandari

Surface Defects		
Billet Defects	**Description**	**Standard / Specification**
Longitudinal Corner Crack	A crack on the radiused or chamfered part of the section running in the direction of the axis, caused by uneven mold cooling.	HOLD / For further evaluation and/or cutting to suitable length otherwise REJECT
Longitudinal Facial Crack	A crack not located on the corner, running along the axis of the product, caused by uneven cooling in the mold, in the secondary cooling zone, or by mold distortion	HOLD / For further evaluation and/or cutting to suitable length otherwise REJECT
Transverse Corner Crack	A crack on the radiused or chamfered part normal to the product is commonly caused by low temperature, bending or straightening issues, or sticking of the product in the mold.	HOLD / For further evaluation and/or cutting to suitable length otherwise REJECT
Transverse Facial Crack	A crack not on the radiused part but normal to the axis of the product may be caused by sticking in the mold or excessive cooling from the mold spray.	HOLD / For further evaluation and/or cutting to suitable length otherwise REJECT
Longitudinal Depression	A channel-shaped depression on the face of the product, running in the direction of the axis, may be caused by factors similar to those of a longitudinal facial crack.	HOLD / For further evaluation and/or cutting to suitable length otherwise REJECT
Transverse Depression	A localized depression on the surface, normal to the axis and often occurring at regular intervals along the product, may be caused by lack of contact with the mold wall due to poor lubrication, rapid cooling, or mold distortion.	HOLD / For further evaluation and/or cutting to suitable length otherwise REJECT
Lap	A fold in the skin caused by rising molten metal engulfing a layer that is already solidifying against the mold wall.	Depth of fold > 3mm : HOLD and for further evaluation and/or surface conditioning and/or cutting
Oscillation / Reciprocation Marks	Transverse marks, usually spaced according to the amount the product has descended during one cycle of reciprocation, are caused by poor lubrication, issues with the reciprocation system, and improper teeming temperature.	Depth of fold > 3mm : HOLD and for further evaluation and/or surface conditioning and/or cutting
Teeming Arrest	A transverse break in the continuity of the skin, extending completely around the product, is due to a temporary stoppage in teeming.	For cutting the good portion to suitable length
Entrapped Scum	Products of deoxidation or refractory erosion that become trapped at the meniscus, forming patches on the product surface.	HOLD / For further evaluation and/or cutting to suitable length otherwise REJECT
Guide Marks	Mechanical damage resulting from irregularities on the guides, supports, bending or straightening rolls, or from misalignment.	H > 10mm & D > 3mm : HOLD / For further evaluation and/or cutting to suitable length otherwise REJECT

Prepared by:
Production Performance Engineer
Bebe Alawadhi

Reviewed by:
Quality Control Engineer
Youssef Alkandari

Internal Defects		
Billet Defects	**Description**	**Standard / Specification**
Pinholes	Small holes close to the surface, often occurring in clusters, are attributed to high levels of oxygen or hydrogen in the steel.	HOLD / Conduct macro etching to assess internal defects
Blowholes	Large holes that are elongated in the direction of columnar growth are generally caused by incorrect levels of oxidation.	HOLD / Conduct macro etching to assess internal defects
Central Unsoundness	A cavity or porosity, the severity of which depends on the steel composition, the size and shape of the product, and the casting conditions.	If more than 3mm, cannot be used for slit sizes
Star Cracks	Radial cracks in the form of a star, originating from the center of the product, are caused by casting conditions.	If more than 5mm, REJECT, cannot be used for slit sizes.
Diagonal Cracks	Pronounced cracks following the interface between two different planes of crystallization are caused by uneven cooling in the mold or sprays and are often associated with rhomboidity.	If more than 5mm. REJECT
Halfway Cracks	Intercolumnar cracks occurring approximately midway between the outside and center of the product are caused by thermal stresses, which are attributed to severe or uneven secondary cooling during solidification.	No cracks from the first 15mm from the surface otherwise REJECT / if crack length is more than 5mm, REJECT

Prepared by:
Production Performance Engineer
Bebe Alawadhi

Reviewed by:
Quality Control Engineer
Youssef Alkandari

Bar Specifications:

1- Bar Dimension and Measurements

Bar Size	Transverse Rib Spacing		Transverse Rib Height	Longitudinal Rib Height	Summation of Gap	Rib Inclination (β)	Rib FlanK Inclination (α)	Top Width of Transverse Rib at the Mid-Point (b)	Characteristics Relative Rib Area	Mass Deviation Tolerance (Not more than)
mm	mm		mm	mm	mm			mm		%
	min	max	min	max	max					
8	4.00	5.60	0.32	1.20	6.20	45^0-70^0	$\geq 40^0$	1.60	0.04	ASTM (-6) KWS – GSO ISO 6935-2 (+8)
10	5.00	7.00	0.40	1.50	7.60			2.00		ASTM (-6) KWS – GSO ISO 6935-2 (+8)
12	6.00	8.40	0.48	1.80	9.20			2.40		ASTM (-6) KWS – GSO ISO 6935-2 (+8)
14	7.00	9.80	0.63	2.10	11.00			2.80	0.056	ASTM (-6) KWS – GSO ISO 6935-2 (±5)
16	8.00	11.20	0.72	2.40	12.20			3.20		ASTM (-6) KWS – GSO ISO 6935-2 (±5)
18	9.00	12.60	0.90	2.70	14.14			3.60		ASTM (-6) KWS – GSO ISO 6935-2 (±5)
20	10.00	14.00	1.00	3.00	15.40			4.00		ASTM (-6) KWS – GSO ISO 6935-2 (±5)
22	11.00	15.40	1.10	3.30	17.20			4.40		ASTM (-6) KWS – GSO ISO 6935-2 (±4)
25	12.50	17.50	1.25	3.75	19.20			5.00		ASTM (-6) KWS – GSO ISO 6935-2 (±4)
32	16.00	22.40	1.60	4.80	24.40			6.40		ASTM (-6) KWS – GSO ISO 6935-2 (±4)
40	20.00	28.00	2.00	6.00	30.60			8.00		ASTM (-6) KWS – GSO ISO 6935-2 (±4)

Prepared by:
Production Performance Engineer
Bebe Alawadhi

Reviewed by:
Quality Control Engineer
Youssef Alkandari

2- Number of Bars per Bundles of Nominal Weight for Different Length

Bar Size	Nominal Weight	Nominal Cross Sectional Area	Nominal Perimeter	Bar/Bundle According Bar Length
mm	Kg	mm^2	mm	12 meter
8	0.395	50.3	25.1	422
10	0.617	78.5	31.4	270
12	0.888	113	37.7	188
14	1.208	154	44.0	138
16	1.578	201	50.3	106
18	1.998	254	56.5	84
20	2.466	314	62.8	68
22	2.984	380	69.1	56
25	3.853	491	78.5	44
32	6.313	804	100.5	26
40	9.864	1257	125.7	17

Prepared by:
Production Performance Engineer
Bebe Alawadhi

Reviewed by:
Quality Control Engineer
Youssef Alkandari

3- Oula Steel for Rebar Specifications Standard Account

Mechanical Properties	Grade	60			
	Yield Strength (MPa)	min	420		
	Tensile Strength (MPa)		550		
	$\frac{Rm}{Re}$		1.10		
	Elongation in 200mm, min, %	8mm-20mm → 9 25mm → 8 28mm-36mm → 7 40mm → 7			
Chemical Composition %	Elements	Chemical Analysis %			
	C	min	0.18	max	0.18
	Mn	min	0.60	max	0.80
	Si	min	0.15	max	0.25
	P	min	-	max	0.035
	S	min	-	max	0.035
	Cr	min	-	max	0.25
	Mo	min	-	max	0.02
	V	min	-	max	0.02
	Ni	min	-	max	0.25
	Cu	min	-	max	0.40
	Sn	min	-	max	0.02
	N	min	-	max	0.012
	B*	min	-	max	0.0008
	C_{eq}	min	0.33	max	0.45
Marking	OSK – SIZE – S4				
Ties	6				
Sampling	One Sample Tension – One Sample Bend – One Sample Dimensional and Mass Variation				
Bundle Weight	2 tons				

Prepared by:
Production Performance Engineer
Bebe Alawadhi

Reviewed by:
Quality Control Engineer
Youssef Alkandari

4- KWS GSO ISO 6935-2 Specification for Deformed Carbon-Steel Bars for Concrete Reinforcement

KWS GSO ISO 6935-2													
DEFORMATION REQUIREMENTS													
Bar Size (mm)	Nominal Weight per Meter (kg/m)	Nominal Cross Sectional Area (mm^2)	Nominal Perimeter (mm)	Transverse Rib Spacing (mm)		Transverse Rib Height (mm)	Longitudinal Rib Height (mm)	Summation of Gap (mm)	Rib Inclination (β)	Rib FlanK Inclination (α)	Top Width of Transverse Rib at the Mid-Point (b) (mm)	Characteristics Relative Rib Area	Mass Deviation Tolerance (Not more than) (%)
				Min	Max	Min	Max	Max					
				0.5d≤c≤1.0d (for d<10mm); 0.5≤c≤0.8d (for d≥10mm)		0.3d	0.15d	25% of nominal perimeter			0.2d (max)		
8	0.395	50.3	25.1	4.00	8.00	0.24	1.20	6.28	35º-75º	≥40º	1.6	0.04	±8
10	0.617	78.5	31.4	5.00	8.00	0.30	1.50	7.85			2.0		±6
12	0.888	113	37.7	6.00	9.60	0.36	1.80	9.42			2.4		±6
14	1.208	154	44.0	7.00	11.20	0.42	2.10	11.00			2.8	0.056	±5
16	1.578	201	50.3	8.00	12.80	0.48	2.40	12.57			3.2		±5
18	1.998	254	56.5	9.00	14.40	0.54	2.70	14.14			3.6		±5
20	2.466	314	62.8	10.00	16.00	0.60	3.00	15.71			4.0		±5
22	2.984	380	69.1	11.00	17.60	0.66	3.30	17.28			4.4		±4
25	3.853	491	78.5	12.50	20.00	0.75	3.75	19.63			5.0		±4
32	6.313	804	100.5	16.00	25.60	0.96	4.80	25.13			6.4		±4
40	9.864	1257	125.7	20.00	32.00	1.20	6.00	31.42			8.0		±4

Prepared by:
Production Performance Engineer
Bebe Alawadhi

Reviewed by:
Quality Control Engineer
Youssef Alkandari

STRENGTH AND DUCTILITY REQUIREMENTS		
B400B-R	**Characteristic Values**	
	Min	**Max**
Yield Strength (Re), MPa	400	-
Tensile Strength (Rm), MPa	-	-
$\frac{Rm}{Re}$	1.08	
Elogation at Max Force, Agt, %	5.0	-

CHEMISTRY (B400B-R)		
Element	**Cast Analysis %**	**Product Analysis %**
C	-	-
Mn	-	-
Si	-	-
P	0.06	0.06
S	0.06	0.06
Cr	-	-
Mo	-	-
V	-	-
Ni	-	-
Cu	-	-
N	-	-
B*	-	-
C_{eq}	-	-

Prepared by:
Production Performance Engineer
Bebe Alawadhi

Reviewed by:
Quality Control Engineer
Youssef Alkandari

5- ASTM A615M and ASTM A706M Specification for Deformed Carbon-Steel Bars for Concrete Reinforcement

ASTM A615M and ASTM A706M									
DEFORMATION REQUIREMENTS									
Bar Size (mm)	Nominal Weight per Meter (kg/m)	Nominal Cross Sectional Area (mm^2)	Nominal Perimeter (mm)	Transverse Rib Spacing (mm)	Transverse Rib Height (mm)	Longitudinal Rib Height (mm) Summation of Gap (mm)		Rib Inclination (β)	Mass Deviation Tolerance (not more than) %
				Max	Min	Max			
				0.7d	d<14; 0.04d 14≤d≤16; 18≤d≤40; 0.05d	12.5% of nominal perimeter on one side	For both sides		
8	0.395	50	25.1	5.60	0.32	3.10	6.20	45º-70º	-6.0
10	0.617	79	31.4	7.00	0.40	3.80	7.60		
12	0.888	113	37.7	8.40	0.48	4.60	9.20		
14	1.208	154	44.0	9.80	0.63	5.50	11.00		
16	1.578	201	50.3	11.20	0.72	6.10	12.20		
18	1.998	254	56.5	12.60	0.90	7.10	14.20		
20	2.466	314	62.8	14.00	1.00	7.70	15.40		
22	2.984	380	69.1	15.40	1.10	8.60	17.20		
25	3.853	491	78.5	17.50	1.25	9.60	19.20		
32	6.313	804	100.5	22.40	1.60	12.20	24.40		
40	9.864	1257	125.7	28.00	2.00	15.30	30.60		

Prepared by:
Production Performance Engineer
Bebe Alawadhi

Reviewed by:
Quality Control Engineer
Youssef Alkandari

STRENGTH AND DUCTILITY REQUIREMENTS				
Grade	**ASTM A615M**		**ASTM A706M**	
	60	80	60	80
Yield Strength (min), MPa	420	550	420	550
Yield Strength (max), MPa	-	-	540	675
Tensile Strength (min), MPa	550	690	550	690
$\frac{Rm}{Re}$ (min)	1.10		1.25	
Elogation in 200mm, min, %				
8mm-20mm	9	7	14	12
25mm	8	7	12	12
28mm-36mm	7	6	12	12
40mm	7	6	10	10

CHEMISTRY				
Element	**ASTM A615M**		**ASTM A706M**	
	Cast Analysis, % max	**Product Analysis, % max**	**Cast Analysis, % max**	**Product Analysis, % max**
C	-	-	0.30	0.33
Mn	-	-	1.50	1.56
Si	-	-	0.50	0.55
P	0.06	0.075	0.035	0.043
S	-	-	0.045	0.053
Cr	-	-	-	-
Mo	-	-	-	-
V	-	-	-	-
Ni	-	-	-	-
Cu	-	-	-	-
N	-	-	-	-
B*	-	-	-	-
C_{eq}	-	-	0.55	-

Prepared by:
Production Performance Engineer
Bebe Alawadhi

Reviewed by:
Quality Control Engineer
Youssef Alkandari

6- Bundles and Rebars will be free from the following Defects

Defects			
Dimensional Defect	**Material Defects**	**Manufacturing Defects**	**Handling and Storage Defects**
Incorrect diameter or length	Improper steel grade or quality	Improperly welded or tied joints	Damage during transportation or on-site handling
Improper bends or deformation	Corrosion or rust	Uneven spacing or distribution of rebars	Improper storage leading to deterioration
	Cracking or splitting	Presence of mill scale or other surface imperfections	
To ensure that bundles and rebars are free from the defects mentioned above, the following quality control measures are typically implemented			
1- Strict adherence to design specifications and material standards			
2- Careful inspections and testing during the manufacturing process			
3- Proper handling, transport, and storage procedures			
4- On-site inspections and quality checks before and during installation			

Prepared by:
Production Performance Engineer
Bebe Alawadhi

Reviewed by:
Quality Control Engineer
Youssef Alkandari