SERVICE MANUAL

HIGH RESOLUTION DISPLAY MONITOR

FE1250+
(NSV1117STTKW)

NEC-MITSUBISHI ELECTRIC VISUAL SYSTEMS CORPORATION
MARCH 2001

CBB-S5732

X-RADIATION WARNING

The surface of pucture tube may generate X-Radiation.
Precaution during servicing, and if possible use of a lead apron or metal for shielding is recommended. To avoid possible exposure to X-Radiation and electrical shock hazard, the high voltage compartment and the picture tube shield must be kept in place whenever the chassis is in operation.
When replacing picture tube use only designated replacement part since it is a critical component with regard to X-Radiation as noted above.

CRITICAL COMPONENT WARNING

- In the schematic diagram/parts list, the components marked " ⚠ " are critical components for X-ray radiation.
  When replacing these parts, use exactly the same one indication in parts list.
- If one or some of the components listed below are replaced, the high voltage and the operating voltage of high voltage hold-down circuit must be re-adjusted according to Clause 2.4 ADJUSTMENT on page 2-6 :

T701, IC103, IC105, R706, R707

Contents

1. Circuit description 1-1
   1.1 Power block 1-1
      1.1.1 Outline 1-1
      1.1.2 Rectifying circuit 1-1
      1.1.3 Surge current suppression 1-1
      1.1.4 Higher harmonic circuit 1-2
      1.1.5 Sub power circuit 1-7
      1.1.6 Main power circuit 1-7
      1.1.7 Demagnetizing circuit 1-10
      1.1.8 Power management circuit 1-10
      1.1.9 Protective circuit 1-10
   1.2 Horizontal deflection block 1-12
      1.2.1 Distortion compensation waveform generating circuit 1-13
      1.2.2 Deflection current compensation circuit 1-22
   1.3 Vertical output block 1-24
   1.4 High voltage block 1-25
      1.4.1 High voltage control circuit 1-25
      1.4.2 Protective function circuit 1-25
      1.4.3 DBF (Dynamic Beam Focus) circuit 1-27
   1.5 CRT compensation block 1-29
      1.5.1 Rotation circuit 1-29
      1.5.2 Corner purity circuit 1-29
      1.5.3 Earth magnetism cancel circuit 1-30
      1.5.4 Vertical magnetic field landing cancel circuit 1-30
      1.5.5 Digital dynamic convergence clear (DDCC) circuit 1-31
   1.6 Control block 1-38
      1.6.1 Sync. signal process 1-38
      1.6.2 Front button 1-38
      1.6.3 I2C bus control 1-38
      1.6.4 Power control 1-38
      1.6.5 Heater Control 1-39
      1.6.6 ABL, Beam protector 1-39
      1.6.7 CRT support 1-39
      1.6.8 High voltage control 1-39
      1.6.9 Display Data Channel 1-40
      1.6.10 LED 1-40
      1.6.11 Clamp pulse 1-41

1.6.12 SPARK 1-41
1.6.13 Avoidance operation during input SYNC switching 1-41
1.6.14 Vertical linearity switch 1-41
1.6.15 H/W RESET 1-41
1.6.16 Oscillation circuit 1-42
1.7 Software 1-42
1.7.1 Outline 1-42
1.7.2 Frequency variation detection function 1-42
1.7.3 Memory of user timing 1-42
1.7.4 Picture adjustment 1-43
1.7.5 Power management 1-43
1.7.6 Display for aging 1-44
1.7.7 LED display 1-44
1.7.8 Status memory to EEPROM 1-45
1.8 Deflection processor block 1-46
1.8.1 Outline 1-46
1.8.2 Vertical deflection waveform generating circuit 1-46
1.8.3 Horizontal deflection drive waveform generating circuit 1-47
1.8.4 Distortion compensation waveform generating circuit 1-47
1.8.5 DBF compensation waveform generating circuit 1-47
1.8.6 Convergence compensation waveform generating circuit 1-48
1.8.7 Blanking waveform generating circuit 1-48
1.8.8 Moire canceling circuit 1-48
1.8.9 Distortion compensating operation 1-50
1.9 Video block 1-51
1.9.1 Picture signal amplifier circuit 1-51
1.9.2 Cut-off circuit 1-55
1.9.3 Sync signal circuit 1-55
1.9.3.1 Separate synchronous signal 1-55
1.9.3.2 Composite sync signal 1-56
1.9.4 On Screen Manager circuit 1-56
1.10 Wave form of main circuit voltage 1-57
2. Adjustment procedure 2-1
2.1 Measuring instruments 2-1
2.2 Preparatory inspections 2-1
2.3 Names of each monitor part 2-2
2.3.1 Configuration of front control panel 2-2
2.3.2 OSM display matrix 2-3

2.3.2.1 User mode 2-3
2.3.2.2 Factory mode 2-4
2.4 Adjustment 2-6
2.4.1 How to select the factory adjustment (FACTORY) mode 2-6
2.4.1.1 Selecting with front panel switches 2-6
2.4.2 Adjustments before aging 2-6
2.4.2.1 Adjusting the high voltage and high voltage protector 2-6
2.4.2.2 SCREEN voltage / FOCUS adjustment 2-7
2.4.2.3 Shock test 2-7
2.4.2.4 Preadjustment before aging 2-7
2.4.2.5 Adjusting the landing (ITC/4 corner purity (GLOBAL SYNC)adjustment) .. 2-7
2.4.3 Adjustments after aging 2-8
2.4.3.1 +B adjustment 2-8
2.4.4 Adjusting the picture size, position and distortion 2-8
2.4.4.1 Adjusting the picture inclination 2-8
2.4.4.2 Adjusting the back raster position 2-8
2.4.4.3 Adjusting the left/right distortion, picture width, picture position (H-PHASE) and vertical linearity (all preset) 2-8
2.4.4.4 Adjusting the DBF amplitude and phase 2-9
2.4.5 Adjusting the cut off 2-10
2.4.6 Adjusting the RGB drive signal 2-13
2.4.6.1 Adjusting the R, G, B drive signal (Adjustment of COLOR 1) 2-13
2.4.6.2 Adjusting ABL 2-13
2.4.7 Adjusting the Purity (GLOBAL SYNC) 2-14
2.4.8 Adjusting the focus 2-15
2.4.9 Adjusting the convergence 2-16
2.4.9.1 Adjusting with ITC 2-16
2.4.9.2 Adjusting DDCP 2-18
2.4.10 Default settings (With factory mode) 2-23
2.5 Inspections (In normal mode) 2-24
2.5.1Electrical performance 2-24
2.5.1.1 Withstand voltage 2-24
2.5.1.2 Grounding conductivity check 2-24
2.5.1.3 Degaussing coil operation 2-24
2.5.1.4 POWER SAVE (IPM) function operation (Set the AC power input to 230V) .. 2-24
2.5.1.5 Confirming the CORNER-PURITY (GLOBAL SYNC) function 2-25
2.5.1.6 Focus, picture performance (Timing No.12 106.25kHZ / 85Hz 1600x1200) 2-25
2.5.1.7 Misconvergence 2-25

2.5.1.8 Picture distortion 2-26
2.5.1.9 Linearity 2-28
2.5.1.10 Adjustment value list 2-29
2.5.1.11 Checking the functions during Composite Sync input 2-30
2.5.1.12 Confirming the reset operation 2-30
2.5.1.13 Confirming the full white luminance 2-30
2.5.1.14 Confirming CONVERGENCE compensation function 2-30
2.5.1.15 Confirming ROTATION compensation function 2-30
2.5.1.16 Luminance/color coordination uniformity 2-30
2.5.1.17 Confirming the full white color coordination 2-31
2.5.1.18 Confirming the color tracking 2-31
2.5.1.19 CRT installation position 2-31
2.5.1.20 Others 2-31
2.6 DDC write data contents 2-32
2.7 Self-diagnosis shipment setting 2-33
2.8 Default inspection 2-33
2.8.1 Default setting of switches 2-33
2.8.2 Default setting of OSM 2-33
2.8.3 Checking the labels 2-33
2.8.4 Packaging 2-33
2.9 Degaussing with handy-demagnetizer 2-34
2.9.1 General precautions 2-34
2.9.2 How to hold and use the handy-demagnetizer 2-34
2.10 Caution 2-34
2.11 Timing chart 2-35
2.12 Adjustment timing 2-36

3. Schematic diagram
4. Exploded view

<Appendix>
Serial number Information
Specification
User's guide
All parts list

1. Circuit description

1.1 Power block

1.1.1 Outline

(1) The power block is compatible with 100 to 120VAC/220 to 240VAC(50/60Hz).

(2) The active filter circuit is adopted to suppress the higher harmonic current and improve the power factor.

(3) The circuit that supplies the electric power to the secondary side is divided into two circuits that are respectively called the main power and sub power.
Though both main and sub circuits supply the power to the secondary side in the normal operation mode, the power is supplied from the sub power only in the power save mode since the main power is stopped.
The main power is the configuration used the flyback converter type switching control IC of the simulative resonant operation. Moreover, the sub power is the configuration used PWM (pulse width modulation) control IC.

(4) The output on the secondary side is shown in Table 1.
(Refer to the power system diagram1-3 in Pages 1-3, 1-4 and 1-5.)

Power block	Output voltage	Application	When power save
Main power side	+190V	H. deflection circuit, Video cut off circuit	OFF
	+80V	Video circuit, DBF circuit, High voltage circuit	OFF
	+15V	H/V deflection circuit, etc.	OFF
	-15V	H/V deflection circuit, etc.	OFF
	+12V	Video circuit, H. deflection circuit, etc.	OFF
Sub power side	+6.5V	Heater	ON
	+5V	MPU, etc.	ON
	P-OFF+5V	Video circuit, etc.	OFF

Table 1

1.1.2 Rectifying circuit

(1) The AC input voltage is rectified in the full wave mode with the diode bridge in D901.

(2) In the higher harmonic circuit of the section 1.1.4, the AC input current becomes the sine wave form in the same phase with the AC input voltage waveform, but the interference is given to other peripheral devices since the noise of the switching current appears on the input side owing to the switching waveform. Therefore, L902 and C906 are inserted to suppress the noise that is caused by the switching current.

1.1.3 Surge current suppression

(1) TH901 (thermistor) suppresses the rush current that flows when the power switch is turned ON. Moreover, D903 and D918 are added to protect D902 from the rush current.

1.1.4 Higher harmonic circuit

(1) The pulsating waveform rectified in the full wave mode by D901 is switched throughout the full cycle by the frequency of several tens kHz or more. Through this, the input current waveform becomes an average of the switching currents of the partial cycles, thus becoming the sine waveform in the macro. (See Fig.1)

(2) For the AC input voltage, the AC input current of the sine wave type in the same phase flows to achieve the power circuit of improved power factor and reduced higher harmonic wave component.

(3) L903 is the choke coil, Q901 is MOS FET, D902 is the rectifying diode, C911 is the block capacitor, and IC901 is the power factor improved controller. The power factor improved controller uses MC33262P of Motorola. (See Fig. 2)

(4) After the sub power starts, P-SUS signal becomes HI when +5V voltage is supplied to the MPU. Then, Q902 is turned ON, the voltage of approx. +18V is supplied to pin8 (VCC terminal) of IC901 through D940 from pin2 of T902, and the following operation is started.

(5) The pulsating voltage waveform rectified in the full wave mode by D901 is divided with R904, R905, R906, R907 and R908 (100VAC : 1.1Vp-p and 240VAC: 2.9Vp-p), and is input to pin3 of IC901 (Multiplier input). Moreover, the output (+side of C911: 400VDC) of the higher harmonic circuit is divided with R913, R914, R915, R916 and R917 (2.5VDC), and is input to pin1 of IC901 (error amplifier input).

(6) The output of the error amplifier and the divided waveform of the pulsating voltage input to pin3 of IC901 sets the threshold voltage of the current sense comparator to control the Q901 flowing current from zero to the peak line of the AC input voltage in the sine wave pattern.

(7) When Q901 is turned ON, the drain current of Q901 flows to R922 and R923 to drop the voltage, and the voltage generated by the voltage drop is input to pin4 (current sense input) of IC901. When the voltage reaches the threshold voltage of the current sense comparator, Q901 is turned OFF.

(8) When Q901 is turned OFF, the accumulated energy of L903 starts to be supplied to the load through D902.

(9) As the accumulated energy of L903 drops, the auxiliary coil voltage (pin8 of L903) also drops. When it reaches the threshold voltage of *zero current detector, Q901 will be turned ON again.

* Pin 5 of IC901 is the zero current detection terminal to input the auxiliary coil voltage of pin10 of L903. The zero current detector monitors that the auxiliary coil voltage drops beyond the thresh old voltage. Thus, the accumulated energy of L903 is indirectly detected.

(10) The above operation is repeated to continue the oscillating operation. Thus, the DC voltage (L903, Q901, D902 and C911 compose the voltage rise circuit.) is gained on the output, and the AC input current of the sine wave in the same phase with the AC input voltage is gained on the input side.

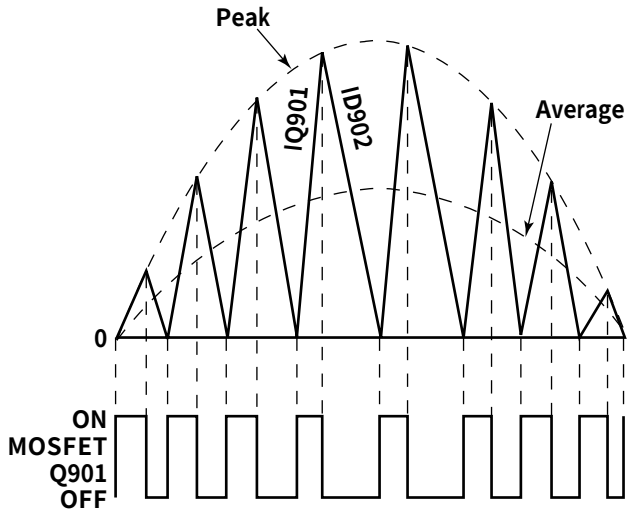

Figure 1. L903 coil current

～Power system diagram 1～

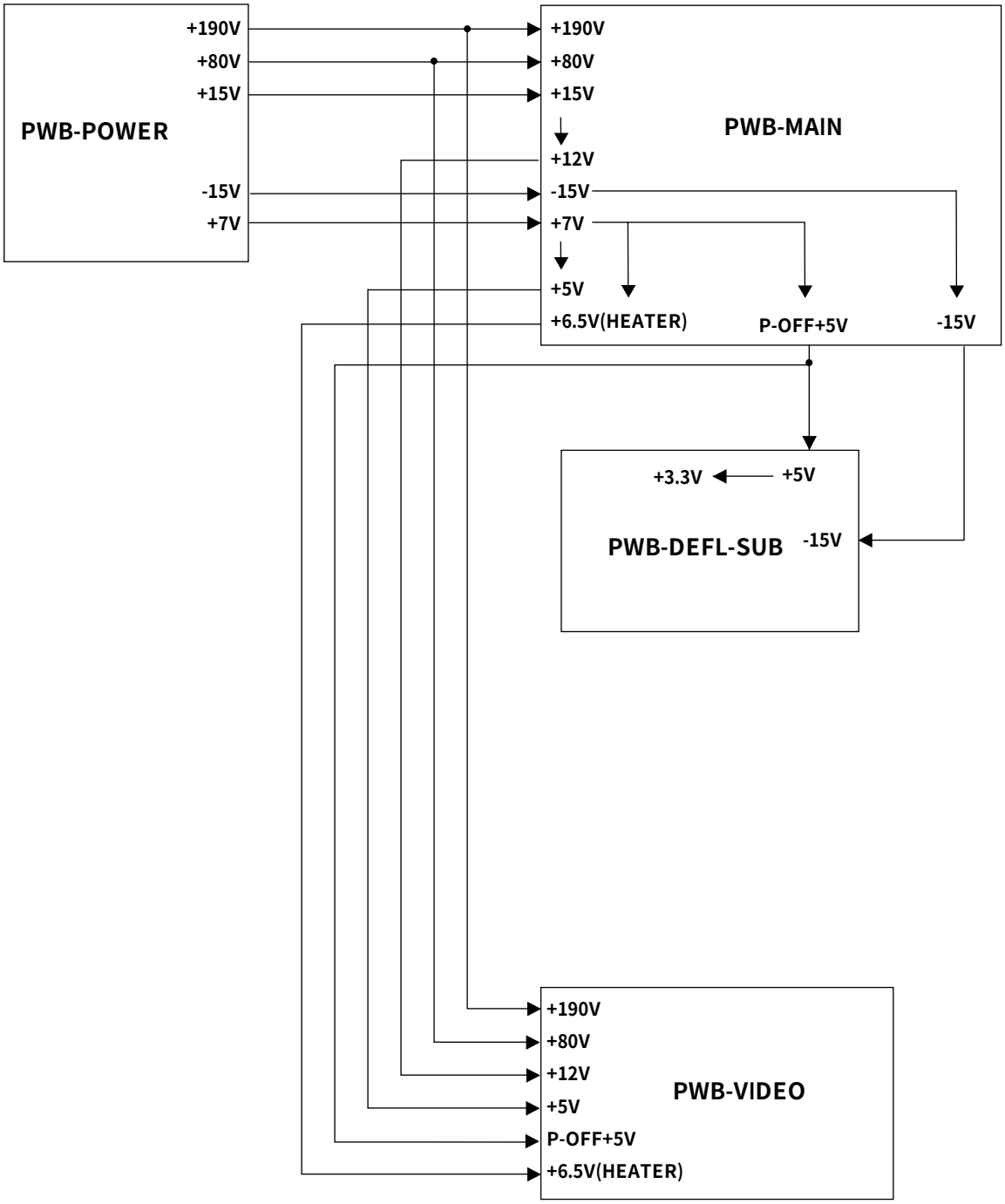

～Power system diagram 2～

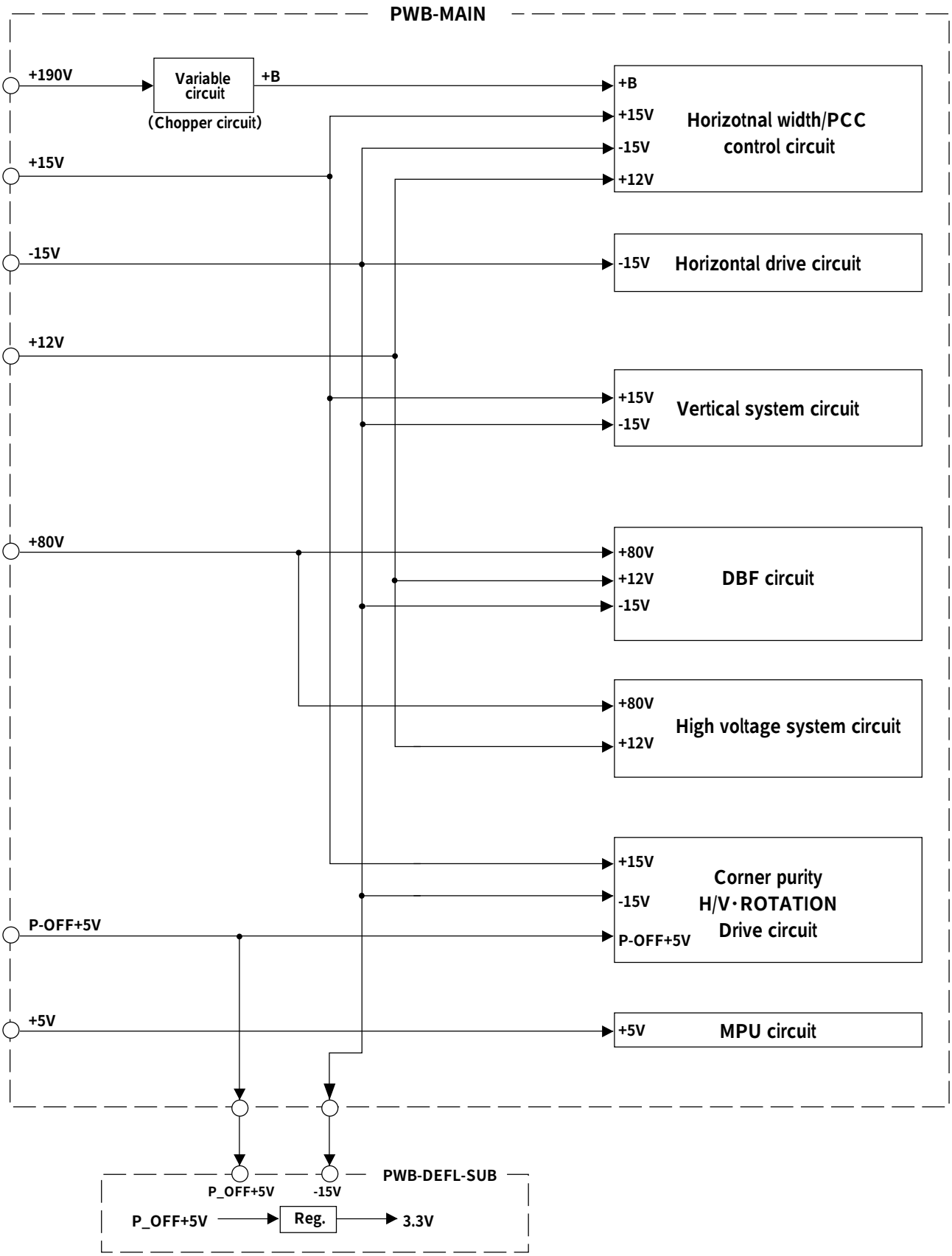

～Power system diagram 3～

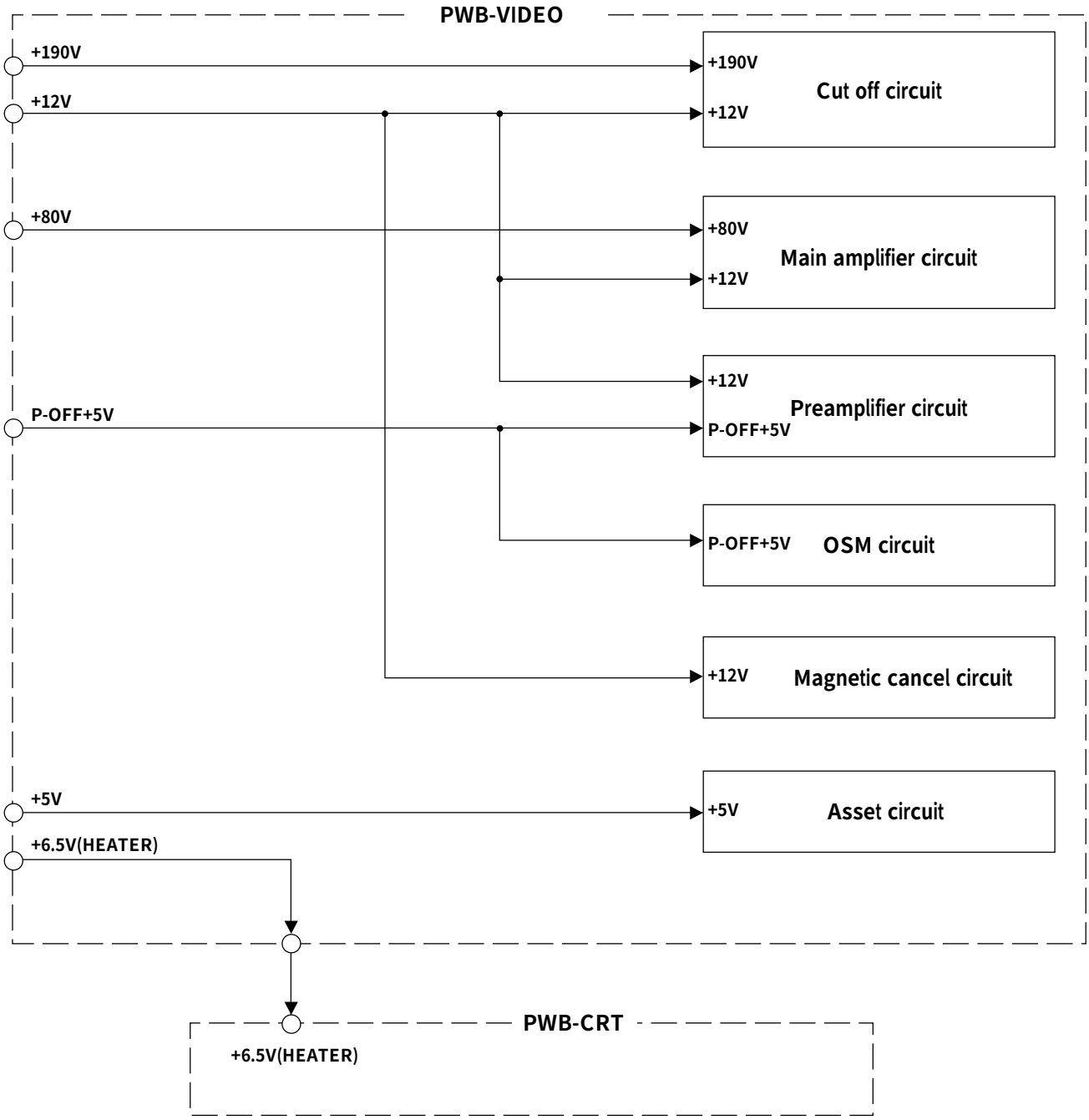

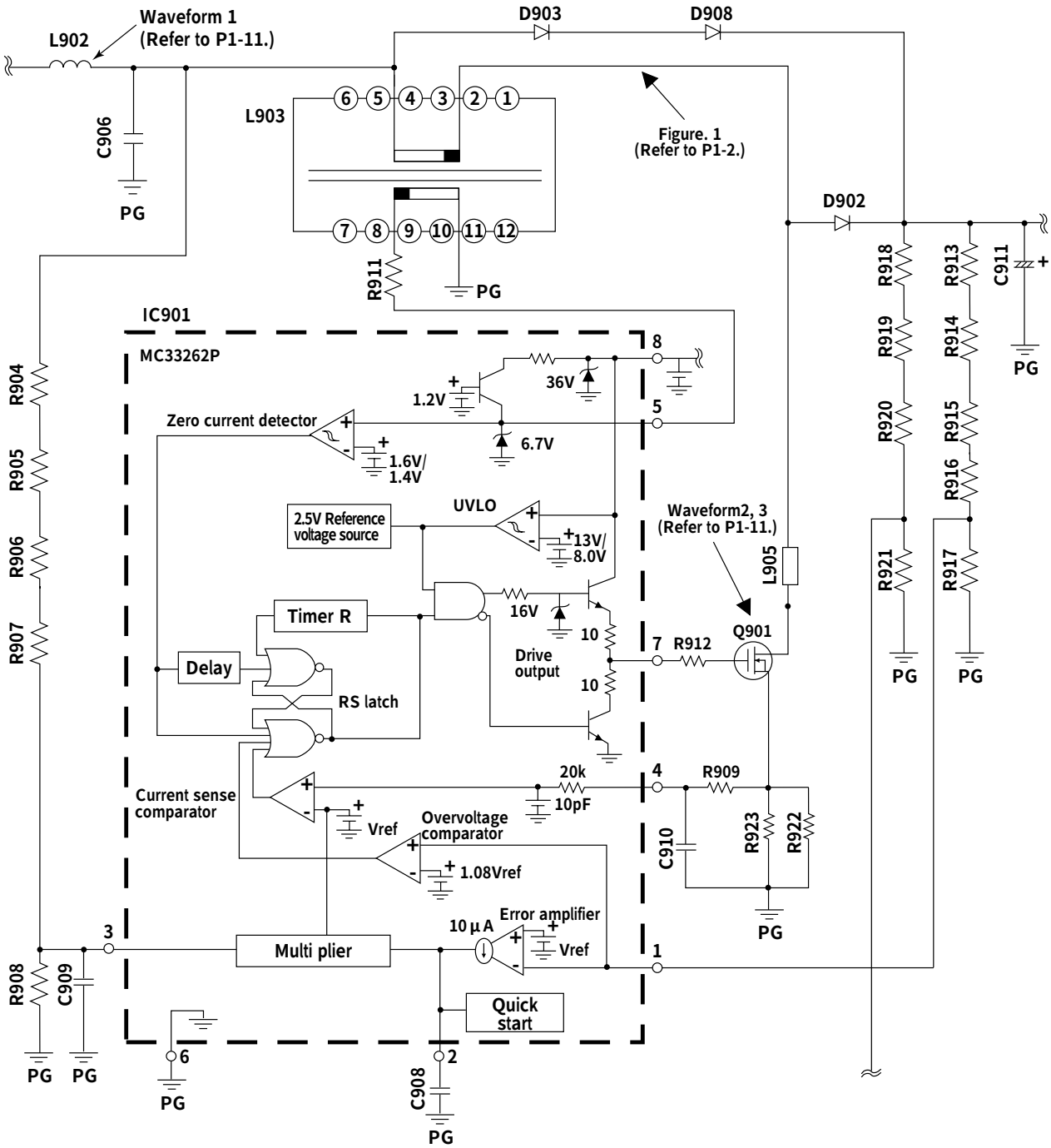

Figure 2. High harmonic waveform circuit

1.1.5 Sub power circuit

(1) The sub power uses the self-excited type regulator MIP0255SP (IC903) produced by Panasonic. (See Fig.3)

(2) When the power switch is turned ON, the rectified and smoothened DC voltage (AC voltage x $\sqrt{2}$) is supplied to pin5 of IC903, and is charged to C941 through Pin 1. When pin1 reaches 5.7V, the current supply from pin3 is cut off to start oscillation in IC903, and the output FET is put into operation. (Since Q902 is OFF, IC902 and IC 903 do not operate.)

(3) This also induces the voltage at pin2 of T902 and on the secondary side. These outputs are respectively rectified, and are used as the power for control on the primary side and the power for the MPU and heater.

(4) The voltage fluctuation on the secondary side is restricted by controlling the current in pin 4 of IC903 (F/B terminal) by using the induced voltage in pin2 of T902.
Further, the voltage on the secondary side is determined by the value of D915 (Zener diode).

(5) When the voltage on the secondary side starts, the MPU will be put into operation and the P-SUS signal line will become HIGH.

(6) This information is transmitted to the primary side via IC912 to turn ON Q902.
When Q902 is turned ON, the power for control on the primary side will be supplied to IC901 and IC902 to operate the higher harmonic circuit. Thus, the main power circuit will be put into operation.

1.1.6 Main power circuit

(1) The main power circuit adopts the flyback type switching power of pseudo-reosonance operation. This is composed of a Sanken brand hybrid IC STR-F6655 (IC902) that integrates the power MOS-FET and control IC.
The circuit operation is described as follows. (See Fig. 4.)

(2) The timing at that the power MOS-FET is turned ON is consistent with the bottom point of the voltage resonant waveform after the transformer (T901) discharges the energy to the secondary side, that is, a half cycle of the resonant frequency determined by Lp value (primary coil inductor value) of T901, and C920 (resonant capacitor). This is called pseudo-reosonance operation. The advantage of such an effect is that the switching loss is reduced by turning it ON when the voltage between the drain sources of the power MOS-FET becomes the lowest.

(3) Like the higher harmonic circuit, voltage of approx. +18V is supplied to the Vcc terminal (Pin 4) of IC902 (STR-F6655) via D940 from pin2 of T902 when Q902 is turned ON by the P-SUS signal from the MPU.
When the voltage of Pin 4 of IC902 reaches 16V, the control circuit will be put into operation to turn ON the integrated MOS-FET.

(4) When MOS-FET is turned ON, the capacitor C1 in IC will be charged to approx. 6.5V. On the other hand, the drain current flows to R930, and the voltage generated by the voltage drop is applied to pin1 (OCP/FB terminal) of IC902.
When the voltage of Pin 1 reaches approx. 0.73V, the comparator (Comp. 1) in IC will be activated to turn OFF MOS-FET.

(5) The voltage between both ends of C1 drops to approx. 3.7V. the oscillator output will be reversed again to turn ON MOS-FET.
The above is repeated to continue the oscillation operation.

(6) Here, IC902 monitors +190V of the output on the secondary side with IC951 (error amplifier) and feeds back it to pin1 of IC902 with IC911 (photocoupler), thus suppressing the voltage fluctuation of the primary side.

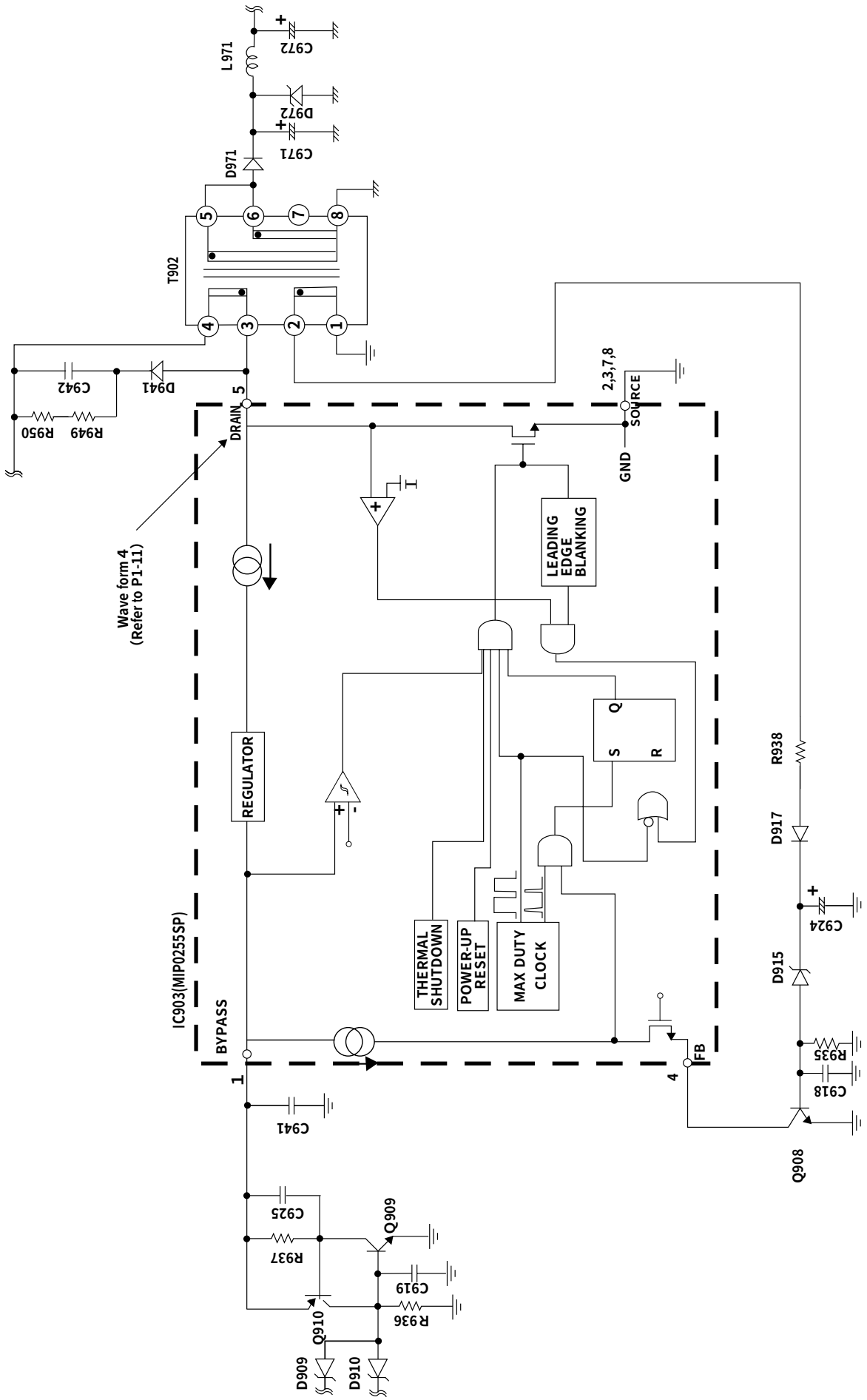

Figure 3. IC903 (MIP0255SP) block diagram and peripheral circuit

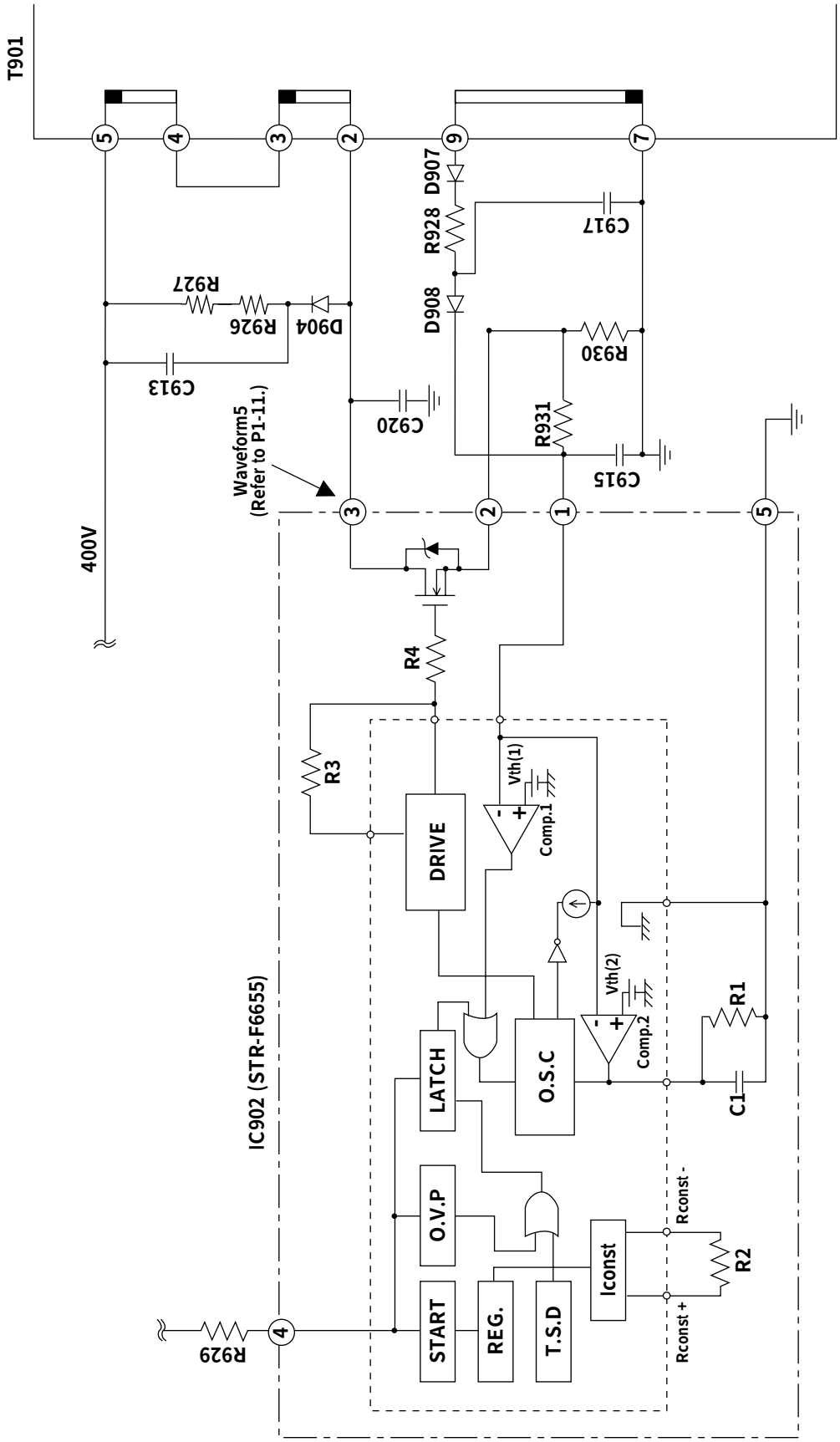

Figure 4. IC902 (STR-F6655) block diagram and peripheral circuit

1.1.7 Demagnetizing circuit

(1) The automatic and manual demagnetizing circuit is provided.
The circuit prevents the picture from dropping its quality due to the magnetization on CRT, and operates as follows.

(2) When powering ON, Q956 flows to activate RY901 by DG signal output by the MPU.
This will make the current flow through the demagnetizing coil for demagnetization. The demagnetizing time is approximately 5 seconds.
Manual demagnetization becomes possible by selecting the demagnetizing menu on the OSM picture.

1.1.8 Power management circuit

Turn ON the power management setting on the menu picture of OSM, and the energy saving mode shown in Table 2 will be ready depending on whether the horizontal/vertical sync. signal is present or not.

Power Save	H-sync	V-sync	Video	Power consumption	Recovery time	LED indicator
OFF	On	On	Active	130W	—	Green
ON	Off	On	Blank	≦3W	5 sec.	Orange
	On	Off	Blank			
	Off	Off	Blank			

Table 2

1.1.9 Protective circuit

(1) Overcurrent protective circuit (primary side)
IC902 is provided with an overcurrent protective circuit. The voltage drop generated by the drain current that flows into R930 is input to Pin 1 (OCP/FB terminal) of IC902. When the voltage reaches 0.73V, the overcurrent protective circuit will be activated.

(2) Overcurrent protective circuit (secondary side)
To protect the parts on the secondary side, the short-circuit detection circuit is provided on the secondary side output (+190V, +80V, +/-15V), one for each. As an example of +190V, the output line of +190V is monitored with R951, R952, D955 and Q951. If it drops beyond +120V for any reason, Q951 will be turned ON to transmit the information to the MPU. Then, since the MPU sets P-SUS signal at LOW, Q902 will be turned OFF to cut off the power to IC902 in order to stop IC902. (IC901 will be also stopped at the same time.) The overcurrent protective circuit is designed to be activated when the output voltage drops approx. 30 to 40%.

(3) Overvoltage protective circuit
R918, R919, R920 and R921 are used to detect the overvoltage in the higher harmonic circuit, and the tertiary coil (Pin 9) of T901 is used to detect the overvoltage of the voltage on the secondary side. They are both connected to the overvoltage protective circuit (Q909, Q910) on the primary side. If any overvoltage results for any reason, Q909 will be turned ON to turn ON Q910. Then, IC903 stops and Q902 will be stopped. Since the power is cut off for IC901 and IC902 as Q902 is stopped, the switching operation will be stopped.

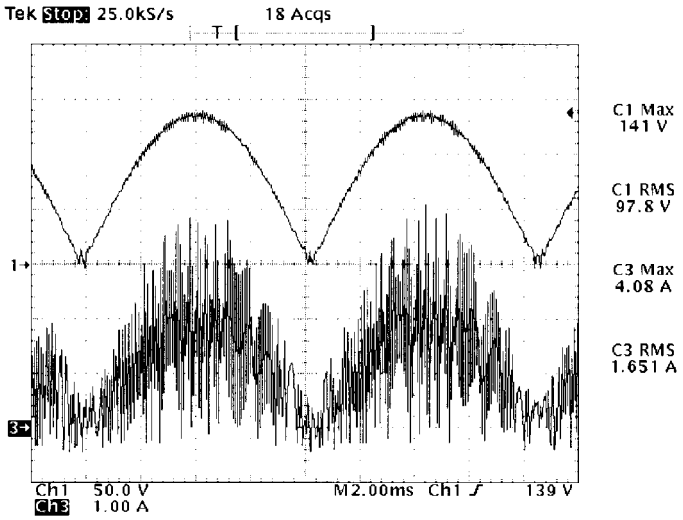

Waveform 1. Top :AC input voltage
Bottom :AC input current

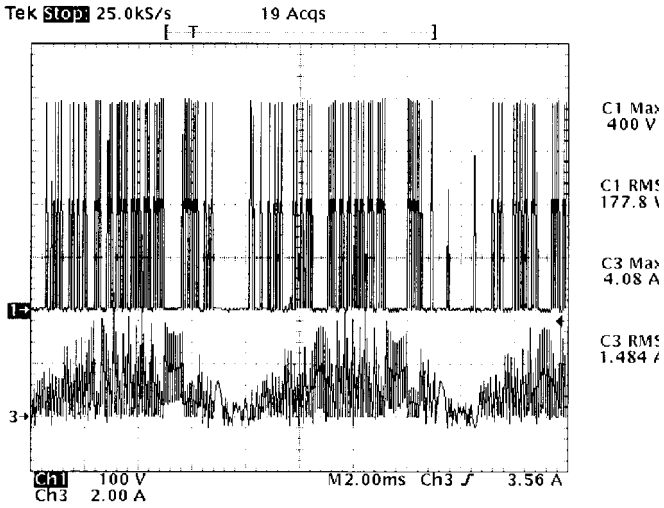

Waveform 2. Top :Q901 drain voltage
Bottom :Q901 drain current

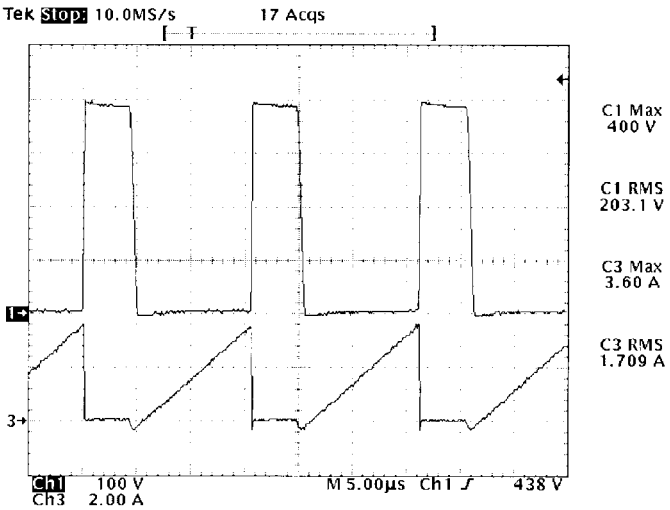

Waveform 3. Top :Q901 drain voltage
Bottom :Q901 drain current

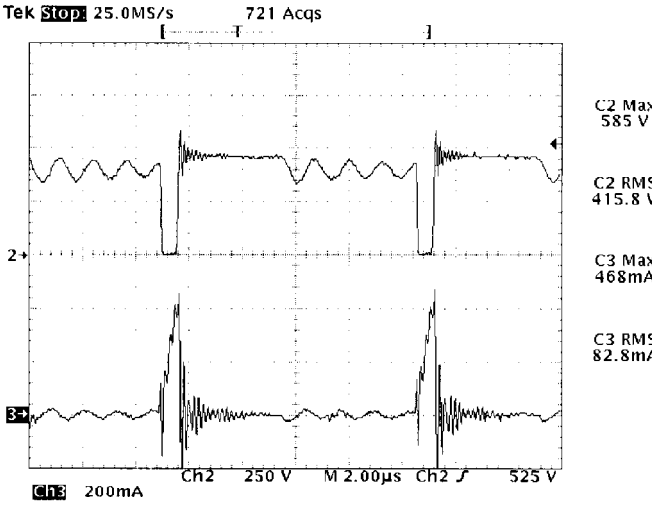

Waveform 4. Top :IC903 drain voltage
Bottom :IC903 drain current

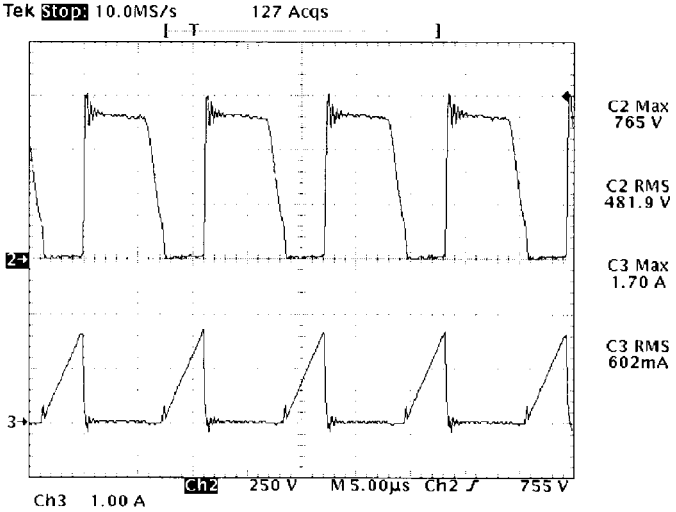

Waveform 5. Top :IC902 drain voltage
Bottom :IC902 drain current

1.2 Horizontal deflection block

The operating principle of the horizontal deflection circuit is given below.

The square wave for horizontal deflection drive is output from pin 25 of IC601 with amplitude 3.3 Vp-p and duty 45% taking account of the transistor delay so that the duty at the output of Q504 in the horizontal deflection circuit is 50%.

Here, the horizontal flyback pulse (AFC, 5V pulse) input to pin 27 of IC601 and the artificial horizontal synchronous signal (5V pulse) input from IC103 (MPU) into pin 44 of IC601 are passed through the inverter of IC6A3 to raise the edge of these waves. This measure is taken to prevent the noise such as jitter, etc.

Further, the circuit composed of Q602 and Q605, etc., connected to pin 13 of IC601 prevents the rapid change in horizontal output frequency when the horizontal input signal becomes no signal. The pin 13 of IC601 is the phase comparator filter terminal in order to carry out phase lock of the horizontal input synchronous signal and the oscillation inside IC601.
When the horizontal input synchronous signal becomes no signal, this terminal voltage shows a rapid change from 0.8V at phase lock to 0V, causing the horizontal output frequency to make a rapid change. With this circuit added, the instantaneous terminal voltage in pin 13 at unlock undergoes smooth change due to C636, suppressing the width of rapid change in the frequency. This prevents the rebound of horizontal collector pulse, and eventually the overvoltage of the horizontal output transistor (Q550).

The terminals of pin 13 to pin 20 of IC601 are the control filter terminals for the horizontal PLL.

The Q550 operates as horizontal output, and the D550 as the dumper diode.

As shown in Fig. 5, the horizontal output transistor Q550 turns to ON/OFF by means of the drive pulse in pin 25 of IC601 in substrate DEFL-SUB through the drive transformer T501, drive transistor Q504, or Q501, Q502, Q503, etc.

The deflection current Idy during Q550 ON gets increased to the maximum level Ip according to the equation shown below:

$$Idy = (Vcc/Ldy) \times Ton$$

The maximum Ip is approximately 8A at full scan when fh = 106k.
Here;

Vcc: Output voltage of Q5F1

Ldy: Parallel value of the Lh value of DY (=62μH) and the horizontal output transformer (=5mH)

TON: The ON time of Q550

When the drive pulse has negative polarity, Q550 turns OFF and Idy starts flowing to charge C550 until the collector voltage reaches the maximum level Vcp.

$$Vcp = Vccx\{1 + (\pi/2)x(Ts/Tr)\}$$

With the maximum Vcp attained, the charges accumulated in C550 flow into DY as the discharge current. This charge/discharge current is called retrace time, and is expressed by the equation given below.

$$Tr = \pi\sqrt{(Ldy \cdot Cr)} \qquad * \ Cr = C550 \text{ value}$$

In the present model, the retrace time is set to approx. 2μs.
Ts is called trace time, and is expressed by the equation given below with the horizontal cycle as T.

$$T = Ts + Tr$$

With Vcp = 0, the dumper diode D550 turns ON and Idy gets decreased from –Ip to 0 ampere. Since Q550 ON time and dumper diode ON time are set to overlap at 0 ampere point of Idy, the crossover distortion is prevented from occurring at 0 ampere point of Idy.
The D550 causes the transient current to flow in the high-speed dumper diode.
The horizontal output transformer T550, connected in parallel to the deflection yoke, operates as a choke coil. Figs. 6 and 7 show the image of circuit operation and the waveforms in actual machine.

1.2.1 Distortion compensation waveform generating circuit

The deflection distortion compensation waveform for horizontal size system is output from pin 64 of IC601. This waveform is output from 1-bit DAC, with 3.3V pulse waveform with resolution 25MHz output at pin 64. This pulse waveform is leveled by the low-pass filters R632 and C622 to obtain the vertical cycle compensation waveform, with the amplitude 1.0 to 1.2Vp-p and connected to pin5 of IC5C0.
The compensation waveform circuit carries out horizontal size and trapezoid compensation, side pin compensation, side pin top and bottom compensation, side pin S-shape compensation and side pin W compensation. (Refer to Compensation Image Diagram in Fig. 22)
The deflection compensation waveform for horizontal phase system is output from pin 57 of IC601. The pin 57 has 1-bit DAC output and outputs the 3.3V pulse waveform with 25MHz resolution. This pulse waveform is then leveled by the low-pass filters R619, R614, C604 and C601 to obtain the vertical cycle waveform, which is then electrically added to the horizontal system PLL filter (pin 20 of IC601) to carry out the deflection distortion compensation of the horizontal phase system. It carries out parallelogram distortion compensation and side pin balance (top and bottom) correction. (Refer to the Compensation Image Diagram in Fig. 22.)

The control of horizontal screen width and the side PCC control are carried out by IC5C0, Q5F0 and Q5F1. First, the horizontal width signal and each distortion compensation signal impressed in pin 5 of IC5C0 from pin 64 of IC601 are compared with the AFC pulse signal rectified and fed back to pin 13 of IC5C0. The signals are further compared with the constant-inclination type saw-tooth wave synchronized with the horizontal cycle created inside IC before turning into the PWM signal of square wave. This PWM signal output from pin 9 of IC5C0 carries out the above control by driving the Q5F1 gate. Fig. 8 shows the block diagram of IC5C0 and Fig. 9 the operation image waveforms.

As for the operation of Q5C3 and Q5C4 connected to pin 11 of IC5C0, Q5C4 is normally OFF when Q5C3 is ON. However, Q5C4 turns ON as Q5C3 turns OFF due to the microcomputer reset signal at power OFF, causing pin 11 of IC5C0 to get dragged to GND. Since pin 11 of IC5C0 carries out control so that the PWM ON time is 1.2μs when 0V is applied, it eventually causes the output voltage of Q5F1 to drop, thus preventing the damage due to the transient error pulse of Q550 (H-OUT Tr).
The Q5F0 works as a ripple filter in 190V line and keeps the Q5F0 emitter voltage constant even if there is a slight fluctuation in the collector voltage of Q5F0. The Q5F0 collector has 190V applied to it, with the emitter output being stable at 187V. This is mainly effective in dynamic regulation.

The horizontal raster position is adjusted by using Q5A1, Q5A2, VR5A1 and T550. The reference voltage is obtained from the connecting point of Cs and is then input into pin 2 of T550. When the emitter voltage in Q5A1 and Q5A2 has the DC level increased by adjusting VR5A1, the current flows to DY side, causing the raster to move left. Reversely, when the DC level of the emitter voltage is decreased, the current flows to Q5A2 side, causing the raster to move right.

The Idy DC level is adjusted by varying the emitter voltage of Q5A1 and Q5A2 at the timing No. 12 (106kHz/85Hz) using VR5A1, so that the raster position comes at the center of CRT. The operation image is shown in Fig. 10.
This adjustment, however, is confined to the factory, and is not open to the users.

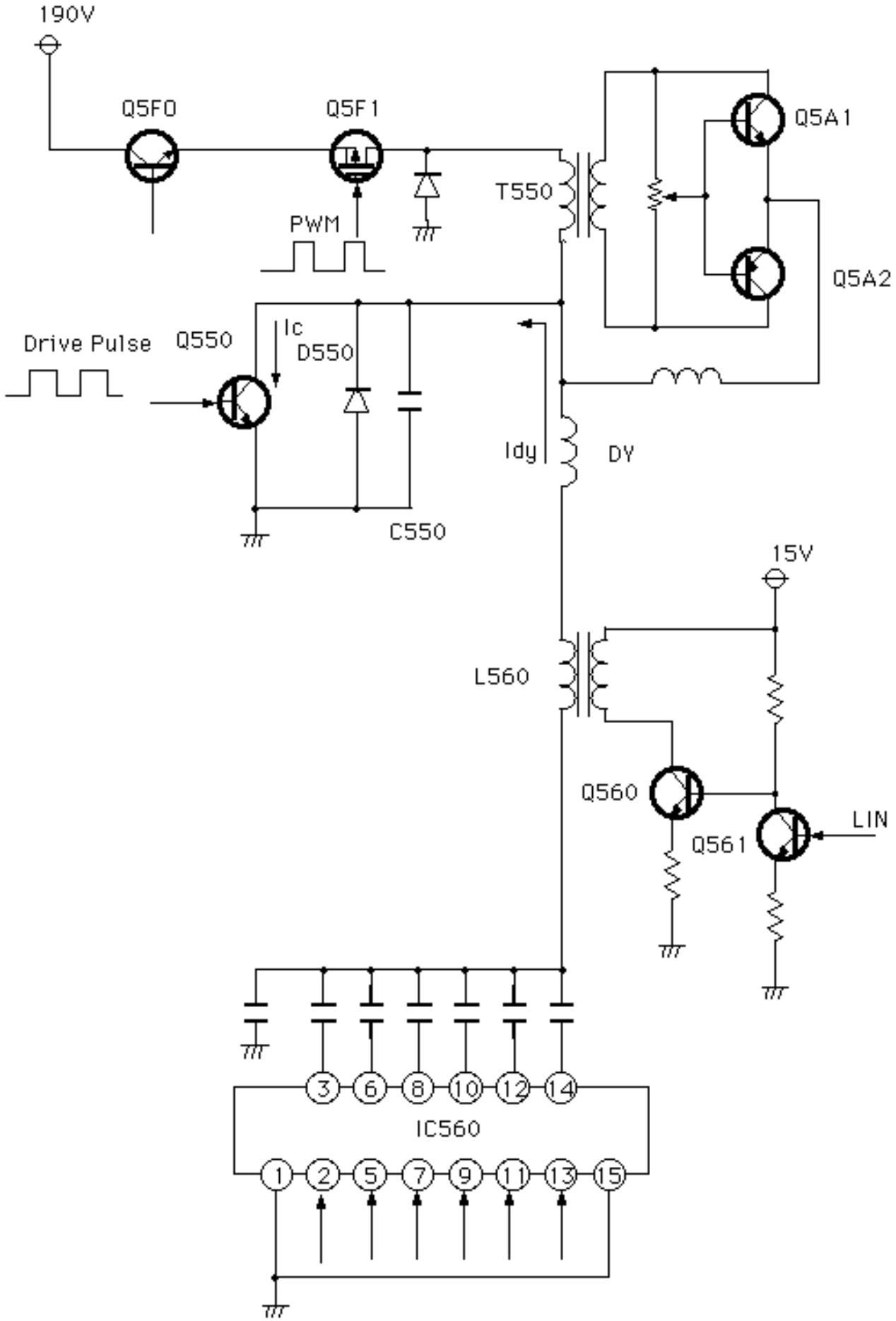

Figure 5 Horizontal deflection circuit

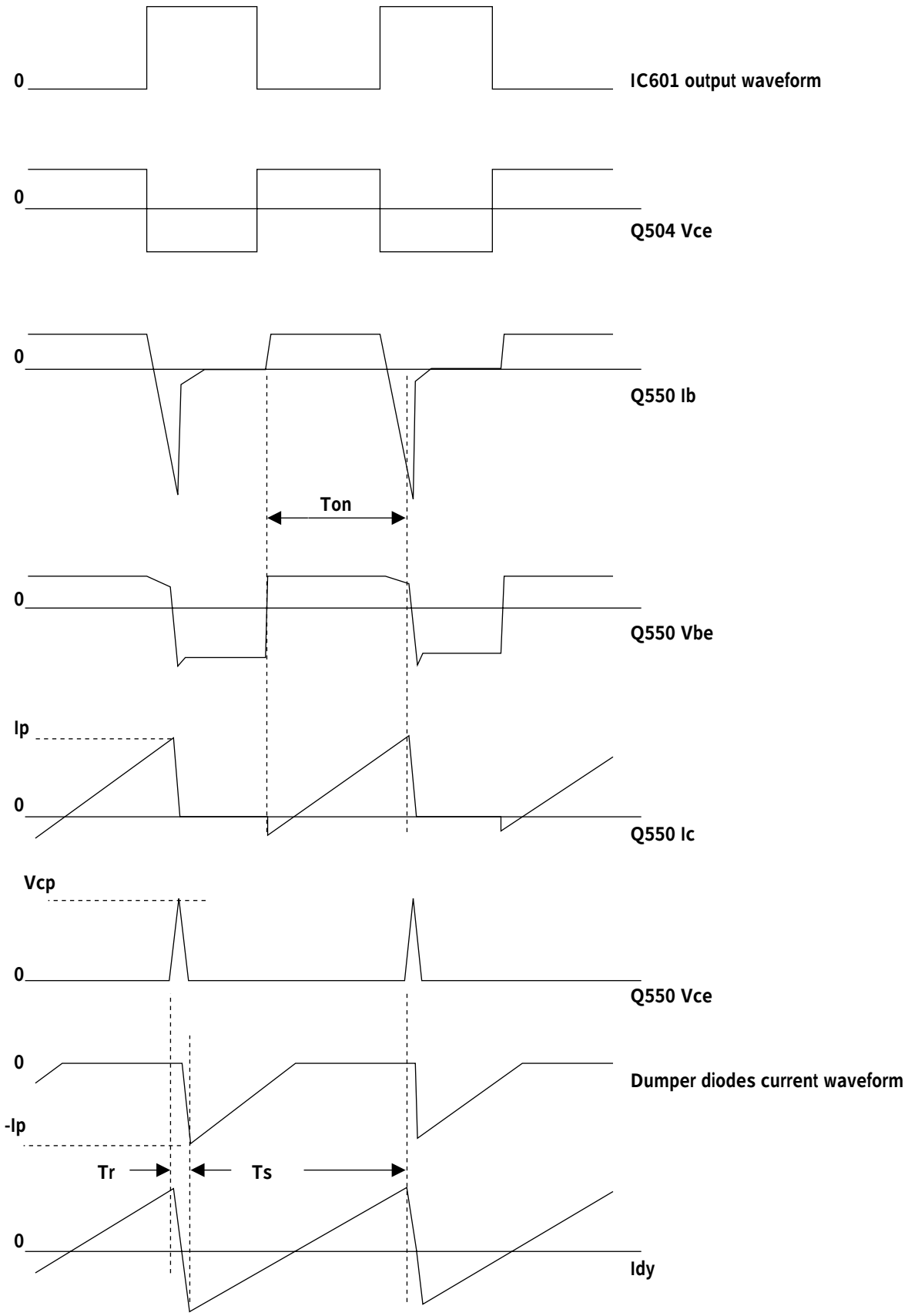

Figure 6 Horizontal deflection circuit operation image

Figure 7. Deflection circuit waveform while fh=106k

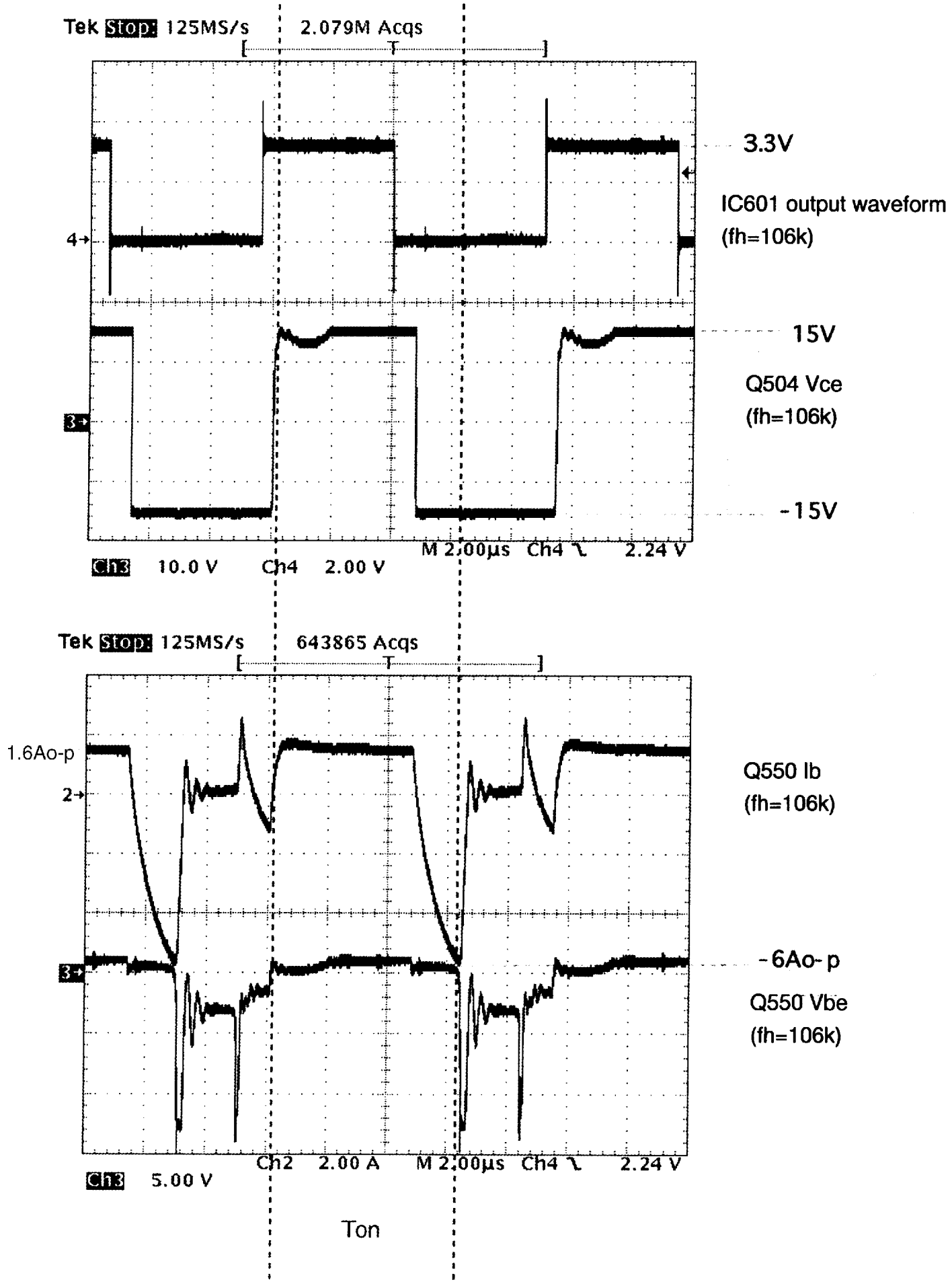

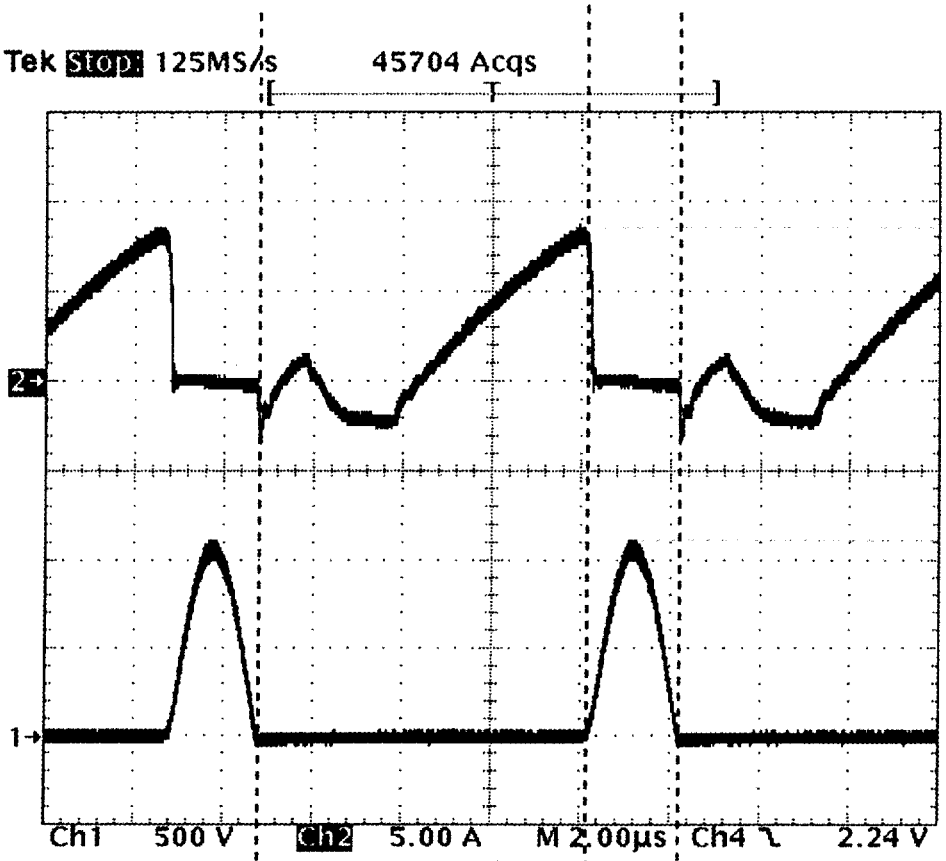
Tek Stop: 125MS/s 45704 Acqs
8Ao-p
Q550 Ic
(fh=106k)
1100Vp
Q550 Vce
(fh=106k)
Ch1 500 V Ch2 5.00 A M 2.00µs Ch4 2.24 V

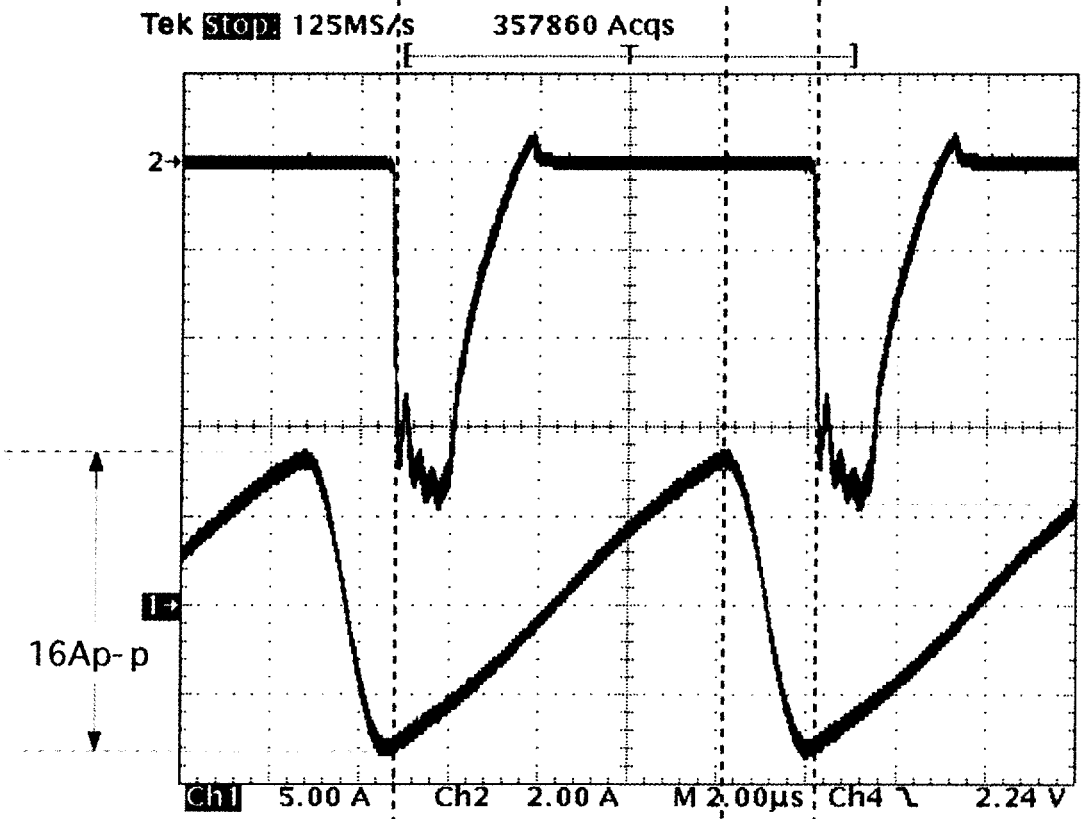
Tek Stop: 125MS/s 357860 Acqs
Damper diode
Current waveform
(fh=106k)
-7.5Ao-p
Idy
(fh=106k)
16Ap-p
Ch1 5.00 A Ch2 2.00 A M 2.00µs Ch4 2.24 V
Ts
Tr

Deflection circuit waveform while fh=31.5k

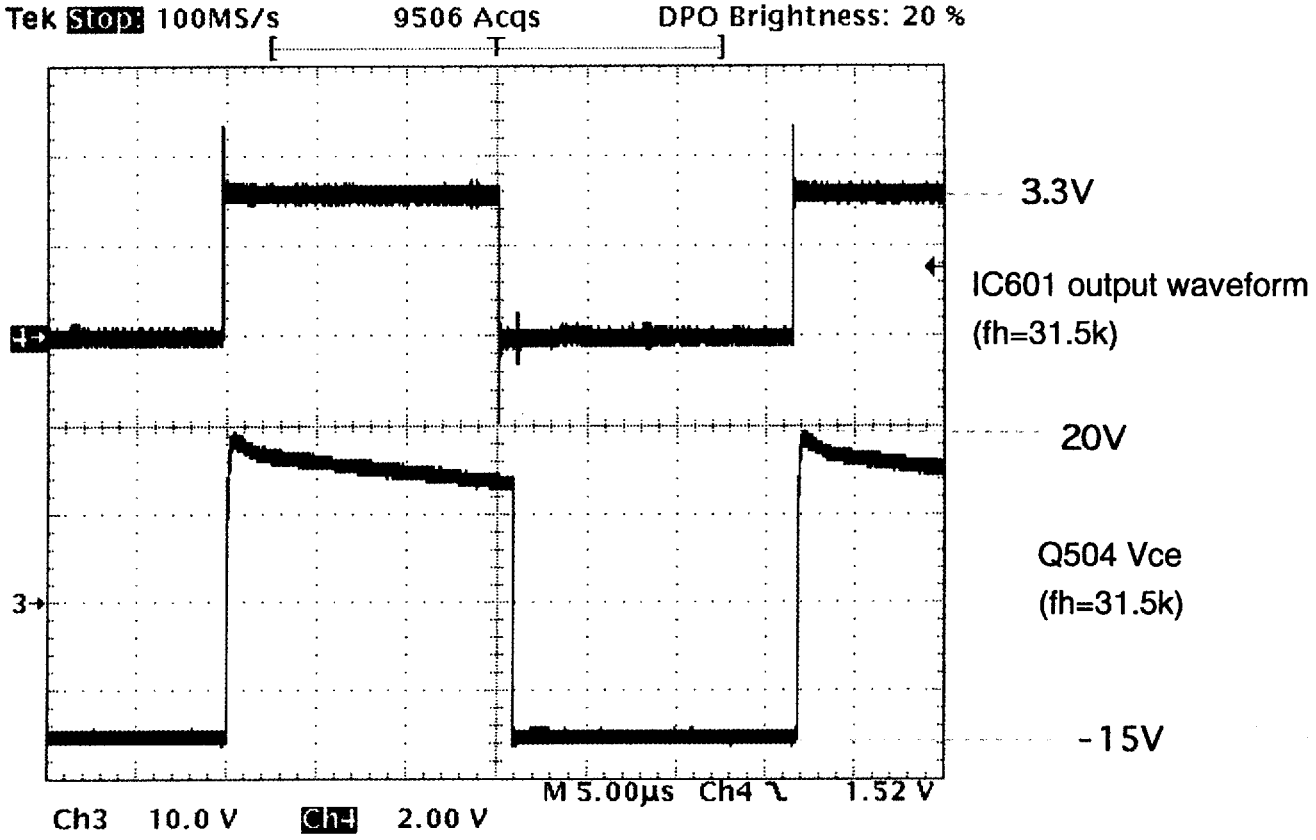

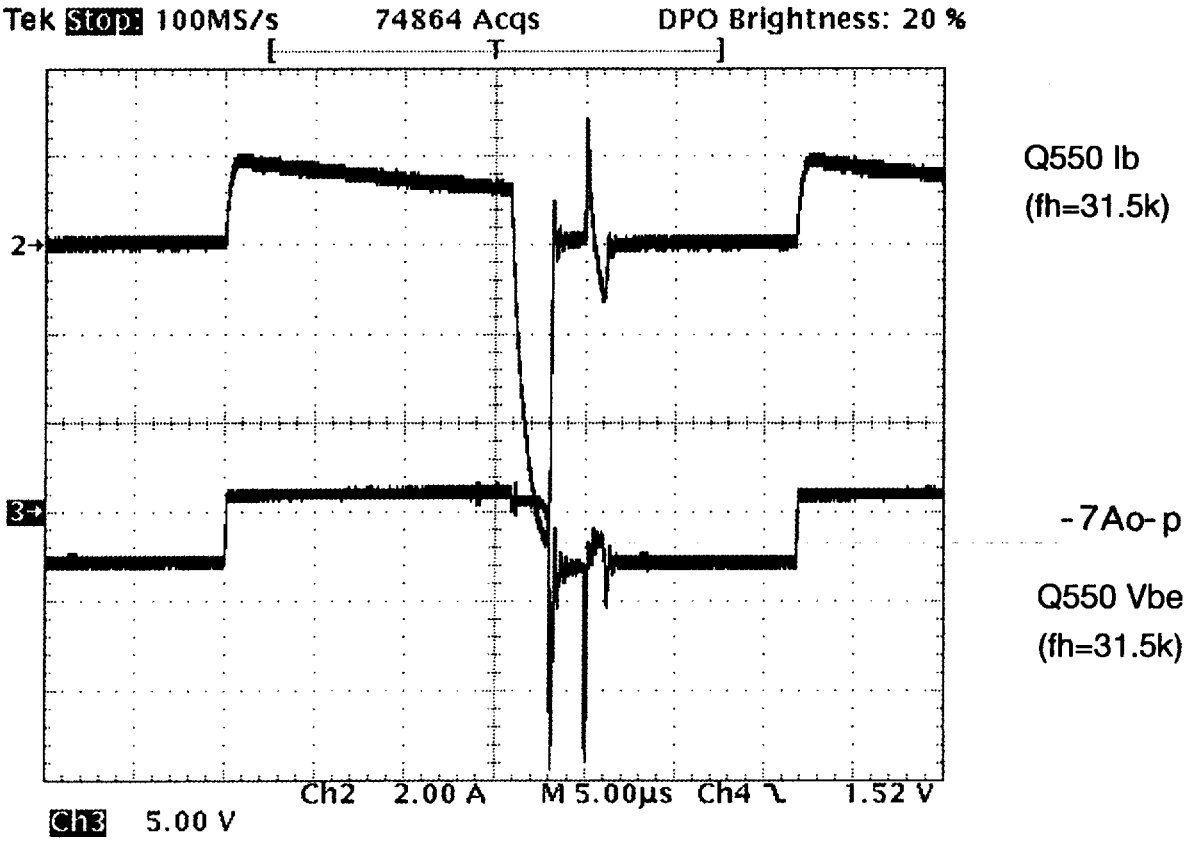

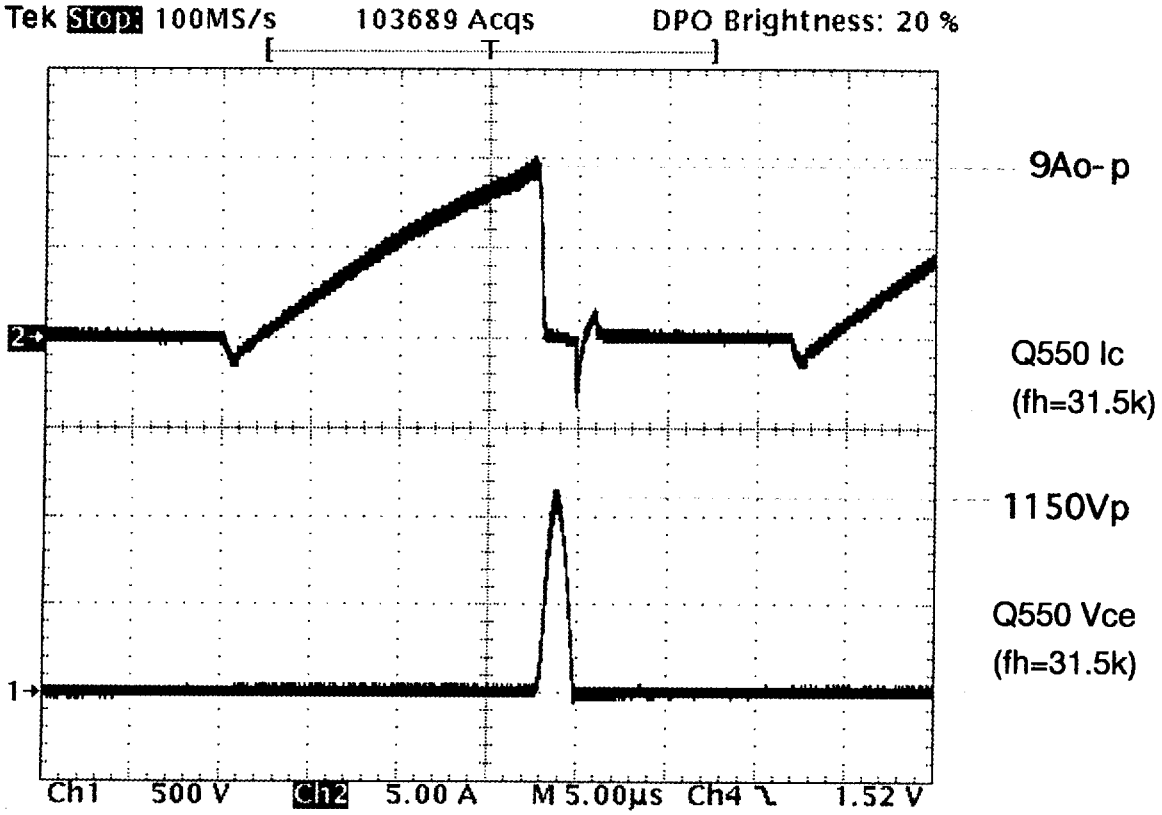
Tek Stop: 100MS/s 103689 Acqs DPO Brightness: 20 %
9Ao-p
Q550 Ic
(fh=31.5k)
1150Vp
Q550 Vce
(fh=31.5k)
Ch1 500 V Ch2 5.00 A M 5.00µs Ch4 1.52 V

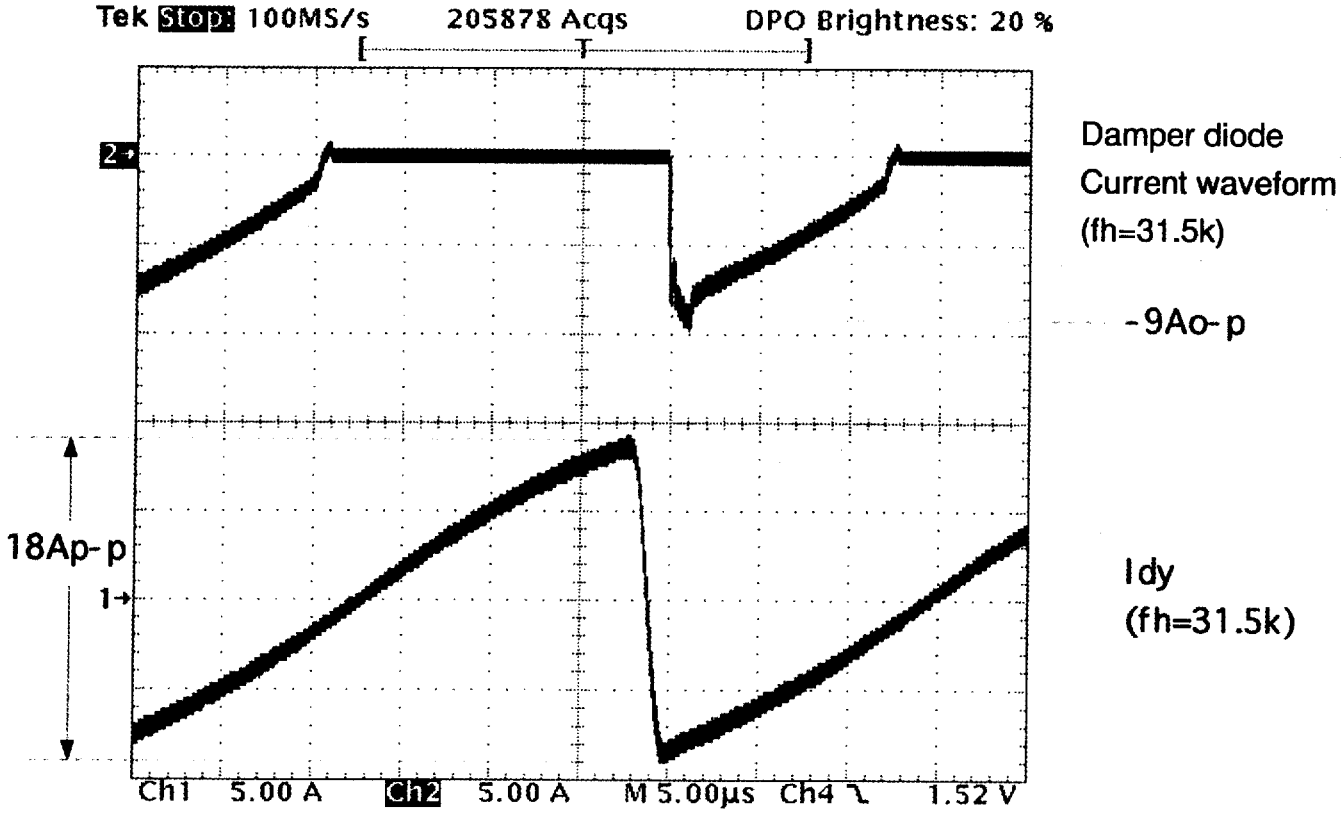
Tek Stop: 100MS/s 205878 Acqs DPO Brightness: 20 %
Damper diode
Current waveform
(fh=31.5k)
-9Ao-p
18Ap-p
Idy
(fh=31.5k)
Ch1 5.00 A Ch2 5.00 A M 5.00µs Ch4 1.52 V

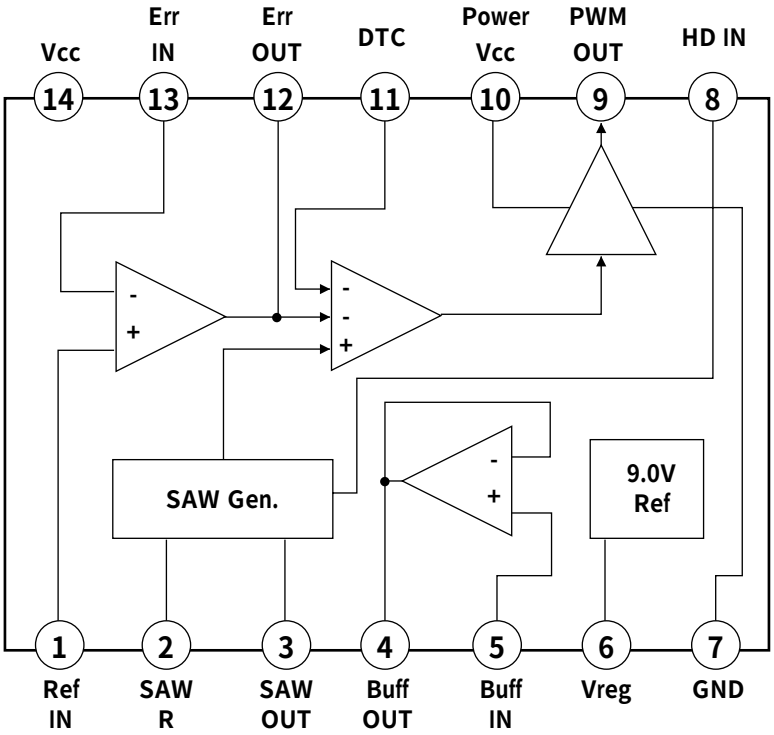

Figure 8. IC5C0 block diagram

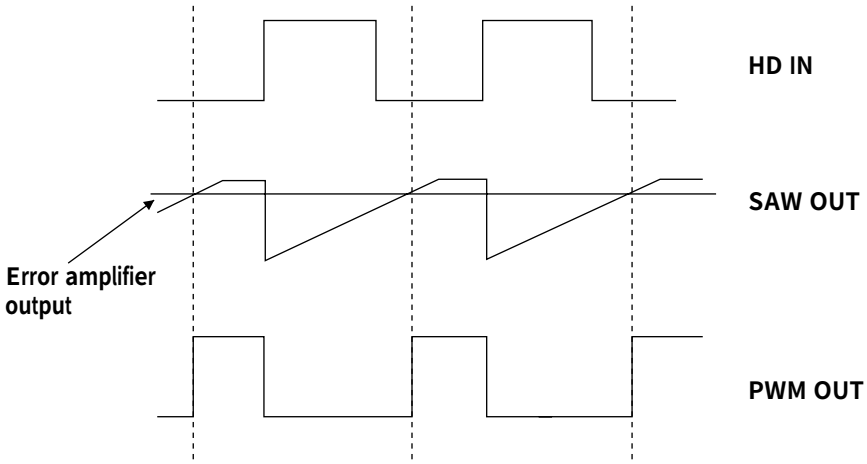

Figure 9. Operation image

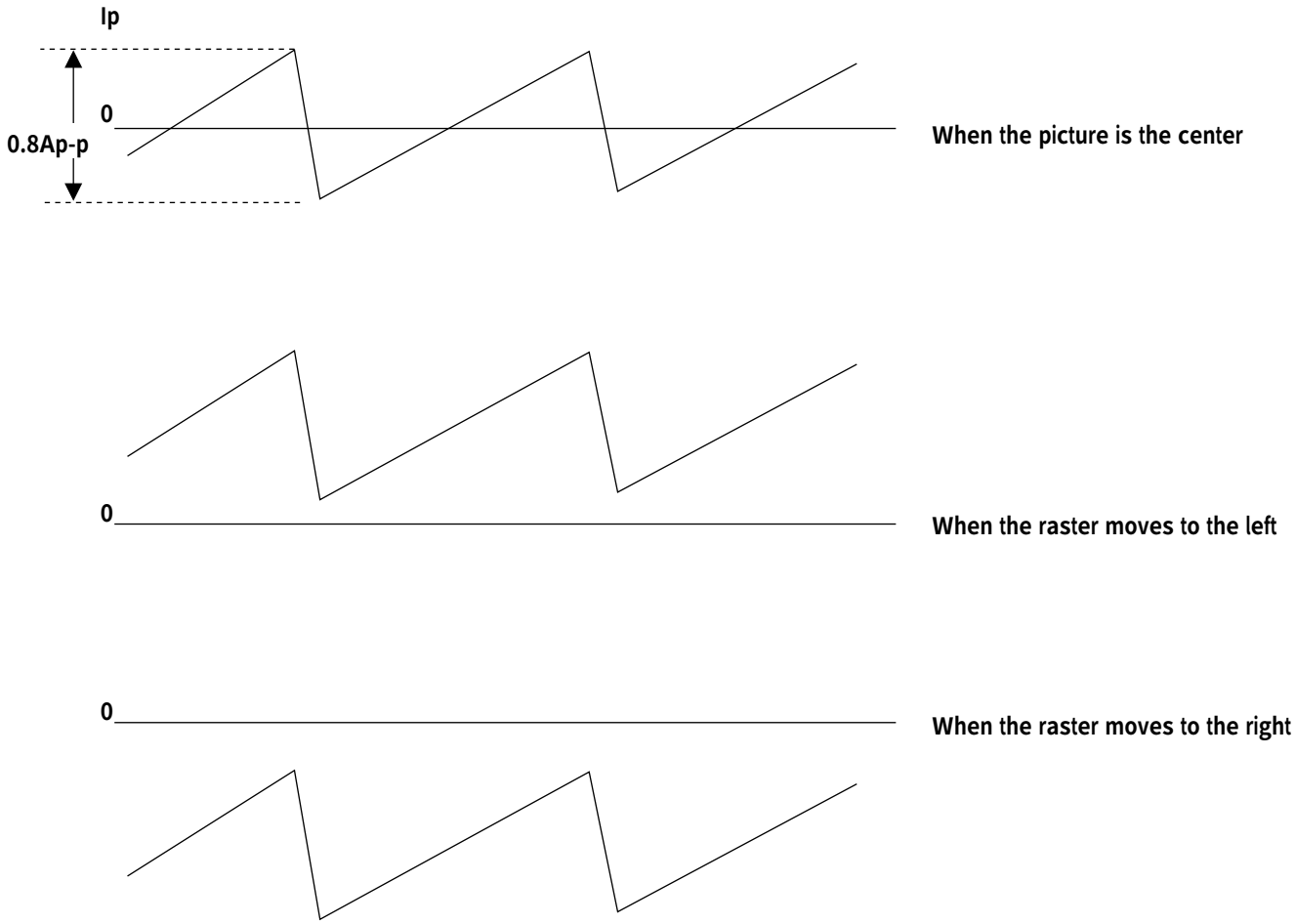

Figure 10 Horizontal position adjustment image

1.2.2 Deflection current compensation circuit

As the picture becomes flatter, the arrival distance of the deflected electronic beam becomes more different between the center and both ends of the picture. Therefore, there is a tendency for the image to be contracted at the center of the picture and expanded at both ends of the picture. Moreover, the left side of the picture is more expanded than the right side of the picture owing to the characteristics of the circuit. CS applies S type compensation to the deflection current with the resonant effect of the deflection yoke and contracts at both ends of the horizontal axis. The linearity coil increases the inductance of the starting section of the deflection current with the supersaturated reactor, and works to contract the left side of the horizontal axis.

As the frequency is lower, the capacity of CS is generally increased and the linearity coil with a larger impedance value is used. In the practical circuit, seven CS capacitors are prepared, and are combined as desired. The linearity coil changes inductance by letting the control current corresponding to the horizontal frequency flow to the control coil.

(1) S type compensation with CS

CS is switched in six steps by FET. IC560 element with six FETs included is used. On IC560, pins 2, 5, 7, 9, 11 and 13 are used as the gate, and pins 3, 6, 8, 10, 12 and 14 are used as the drain. Pins 1 and 15 are used as the ground, and each source are grounded to the earth. The binary value signal of HIGH (5V) or LOW (0V) is input to each gate by IC103. In case of HIGH, FET is turned ON. In case of LOW, FET is turned OFF. The correspondence to the signals from the capacitor and IC103 are as follows.

Table 3

	G	D	Capacitor	Signal
FET1	2	3	C565	CS2
FET2	5	6	C566	CS1
FET3	7	8	C567	CS4
FET4	9	10	C568	CS3
FET5	11	12	C569	CS5
FET6	13	14	C570	CS6

The column of G and D is Pin No.

(2) Compensation with linearity coil

The linearity coil compensates the left expansion of raster by changing the inductance value through the current value flow in order to keep the horizontal linearity to appropriate level. In the actual circuit, L560 stands for the linearity coil.

The newly adopted linearity coil is provided with a control winding capable of controlling the current characteristics of the inductance value. The control voltage (DC) corresponding to each horizontal frequency is supplied from IC103 to pass the control current to the control winding through Q560 and Q561. This controls the current characteristics of the inductance value, and eventually keeps the horizontal linearity to appropriate level. An image of characteristic of linearity coil is as fugure 11.

As shown in the Table 4 below, CS is switched on the horizontal frequency bands. 1/0 in the table express the signals from IC103 with 1 for HIGH and 0 for LOW. Here, the column of the frequency expresses the lower limit value.

Table 4

fH (kHz)	Fixed C563 0.13	Fixed C564 0.13	CS6 C570 0.068	CS5 C569 0.1	CS4 C567 0.22	CS3 C568 0.62	CS2 C565 1	CS1 C566 1.2	TOTAL (μF)
104~			0	0	0	0	0	0	0.260
94~			0	0	0	0	0	0	0.260
92~			1	0	0	0	0	0	0.328
86.5~			1	0	0	0	0	0	0.328
83~			1	1	0	0	0	0	0.428
81.5~			1	1	0	0	0	0	0.428
80~			1	1	0	0	0	0	0.428
78.5~			0	0	1	0	0	0	0.480
76~			0	0	1	0	0	0	0.480
73~			0	1	1	0	0	0	0.580
66~			0	1	1	0	0	0	0.580
63~			0	0	0	1	0	0	0.880
59~			1	0	0	1	0	0	0.948
55~			1	1	0	1	0	0	1.048
49~			0	0	1	1	0	0	1.100
45~			0	0	1	0	1	0	1.480
39~			0	1	1	0	0	1	1.780
36.5~			0	1	1	1	0	1	2.400
34~			1	1	0	0	1	1	2.628
30~			1	1	1	1	1	1	3.468

Here, the following timings are exceptional.

ap21			1	1	1	0	0	0	0.648
80k/75			0	0	1	0	0	0	0.480
91k/85			0	1	0	0	0	0	0.360

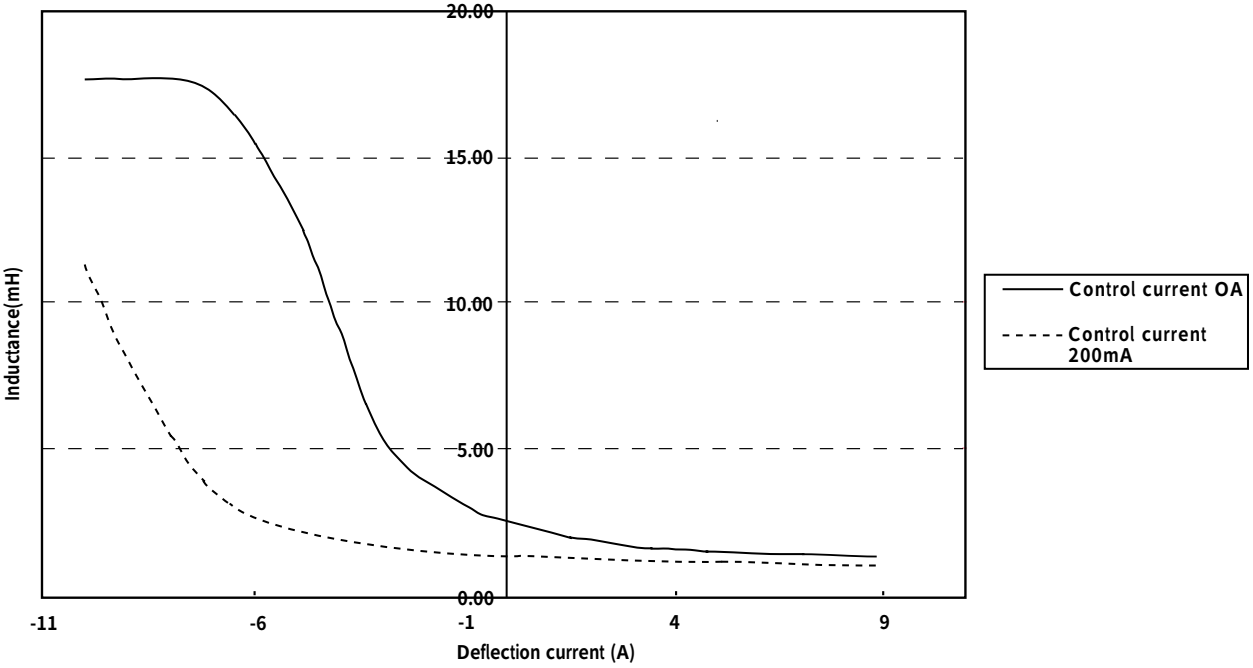

Figure 11 Characteristic of variable lineality

The waveform of the deflection current is compensated from Fig. (a) to Fig. (b) through the above. The starting section of the current is smoothened, and the linear section becomes the S type.

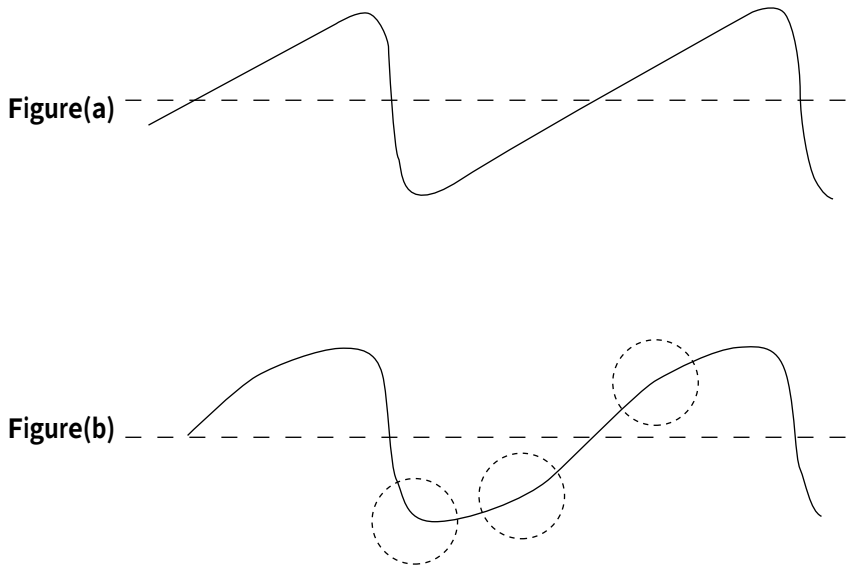

1.3 Vertical output block

The vertical deflection circuit controls the vertical width and vertical position with IC601 on the DEFL_SUB substract, and IC603 controls the linearity. Moreover, the signal output from IC603 is input to the vertical deflection output IC451.

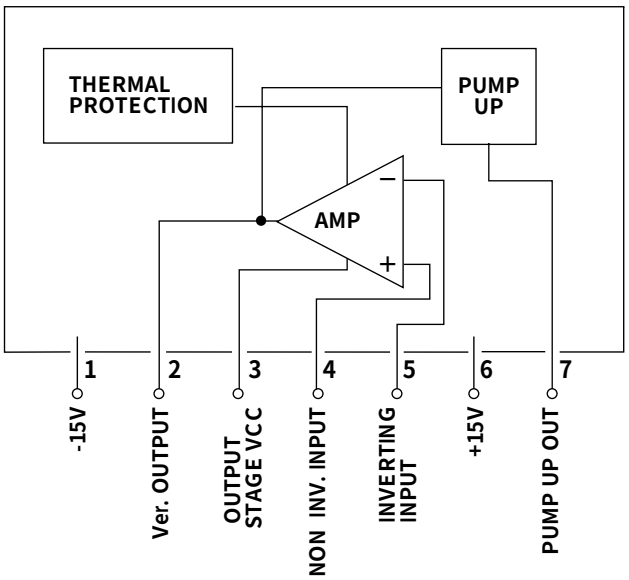

Figure 12 IC451(LA7841L) Pin connection & Function Block diagram

1.4 High voltage block

The high voltage circuit is composed of the high-voltage regulator IC701, MOS-FET Q701 flyback transformer (FBT) T701, operation amplifier IC702 and their peripheral circuits.

1.4.1 High voltage control circuit

The IC701 is an IC for high voltage control, with the block diagram given in Fig.13. The OFF trigger PWM control system is adopted to carry out high voltage control. The built-in VCO circuit gets synchronized when the horizontal synchronous signal (hereafter SYNC signal) is input from Pin 3 of IC701 (horizontal synchronous input terminal). Thus, the MOS-FET Q701 is controlled to turn OFF with the timing of the SYNC signal changing over to HI, and is called OFF trigger system.
Further, the DC voltage, output after the feedback signal (IC701 Pin 11) from FBT T701 is compared with the high-voltage set voltage (IC701 Pin 12) in the internal error amplifier, is compared with the saw-tooth-waveform of VCO to control the pulse output DUTY so as to keep the high voltage constant (PWM control). The timing chart for OFF trigger PWM control system is given in Fig.14. Set the high voltage by selecting [HVADJ] in OSM and manipulating +/- button (Standard value: 27.0kV).

1.4.2 Protective function circuit

(1) Start and stop of high-voltage regulator IC701
The IC701 starts operation when Vcc voltage (power voltage applied to Pin 2 and Pin 10) attains the level of 8.4 Vtyp, and the operation stops when the Vcc voltage is less than 7.4 Vtyp.

(2) IC701 overcurrent protection (OCP) function
It detects the peak value of the drain current in MOS-FET Q701 per pulse and stops DRIVE when the voltage in Pin 6 of IC701 detecting the end-to-end voltage of the source resistors (R722 and R723), exceeds 1.0 Vtyp until the next SYNC signal is input.

(3) IC701 overload protection (OLP) function
This function brings the system to the latch stop when OCP gets continuously activated due to continuous overload.
It forms time constant using C718. With OCP activated and C718 charged and the voltage in Pin 8 of IC701 exceeding 2.5 Vtyp, IC701 gets set to Latch mode, bringing the control operation to stop. This status does not get released (reset) until the Vcc voltage (power voltage applied to Pin 2 and Pin 10) in IC701 is less than 7.4 Vtyp.

(4) Over-voltage protection function for anode voltage (X-ray protector)
A voltage proportional to the high voltage is generated in Pin 6 of T701 due to the winding ratio between secondary and tertiary winding inside FBT T701. This voltage is then rectified by D704 and C705 and is further divided by R706 and R707 before being input in Pin 17 of microcomputer IC103 for comparison with the X-Pro set value. In case the voltage exceeds the set value, the output in Pin 33 of microcomputer IC103 gets fixed to LOW (P-OFF mode). With the mode set to P-OFF, the application of voltage Vcc to IC701 stops, causing the IC701 operation to stop. The status continues until the power SW is turned OFF. The overvoltage protection function is set to operate when the high voltage level reaches 30.5kV (with the beam current is approx. 0.1mA).

(5) Overcurrent protection function for beam current (beam protector)
The beam current is supplied from +12V power source through R709. Since the end-to-end voltage of R709 varies according to the beam current, the voltage drop due to R709 becomes large if the beam current increases. The voltage in Pin 9 of FBT T701 (the voltage obtained by subtracting the voltage drop due to beam current from the +12V power voltage) undergoes resistance division by R710 and R711, and is then input into Pin 6 of operation amplifier IC702 for comparison with Pin 5 of IC702 (reference voltage). The voltage is then output (Pin 7 of IC702) and is input into Pin 16 of microcomputer IC103. The voltage in Pin 7 of IC702 (output terminal) is output linearly due to the fluctuation in beam current. However, if the terminal voltage in Pin 16 of IC103 exceeds +5V, the output of Pin 33 of IC103 gets fixed to LOW (P-OFF mode). With the mode set to P-OFF, the application of Vcc voltage to IC701 stops, causing the IC701 operation to stop. This status continues until the power switch is turned OFF. The overcurrent protection function is set to operate when the beam current reaches the level of approximately 1300μA.

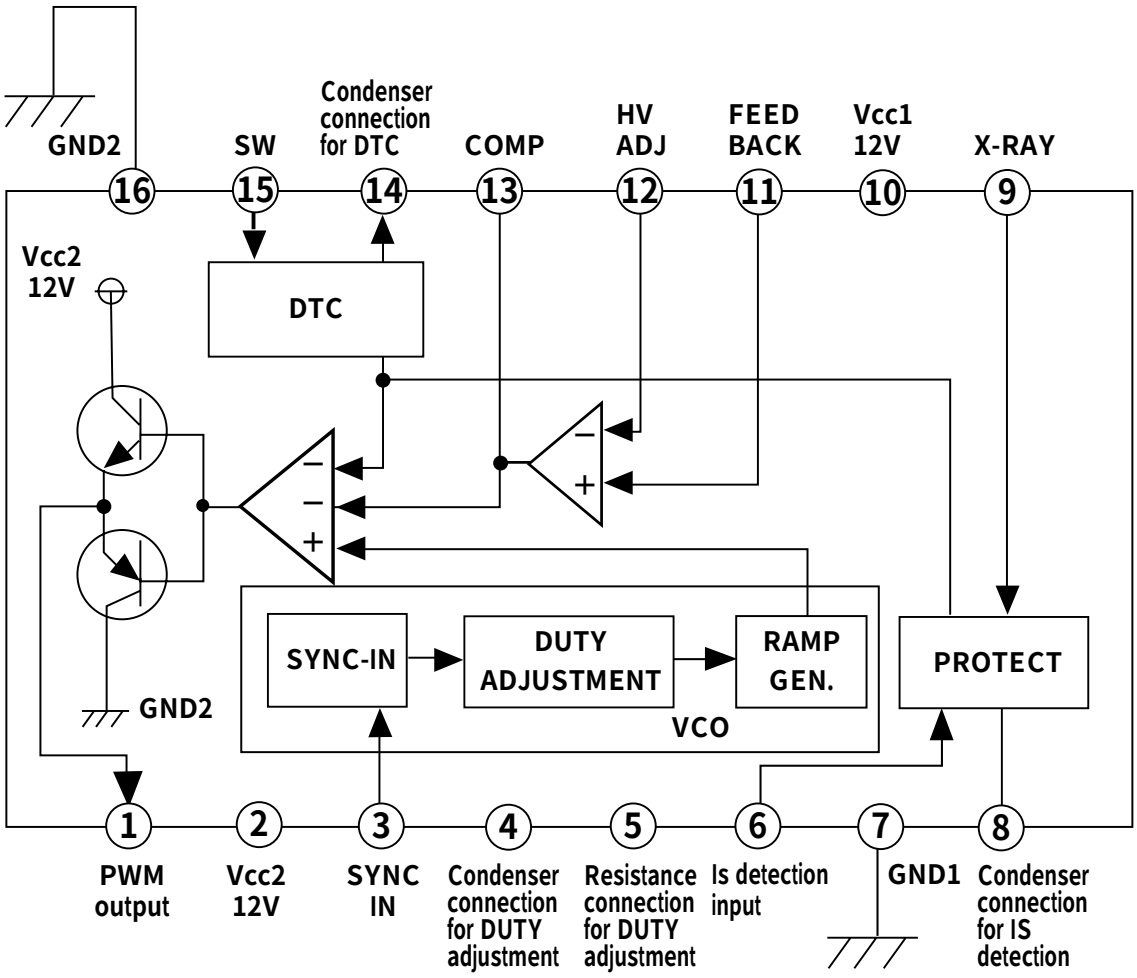

Figure 13. High voltage regulator IC701 block diagram

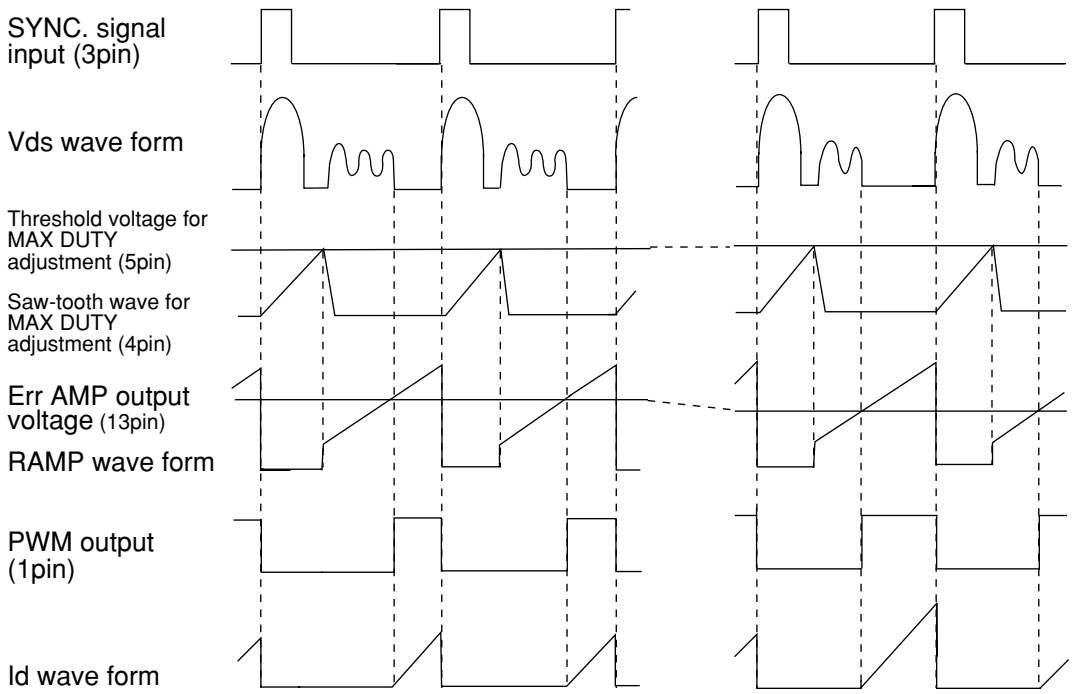

Figure 14. OFF trigger PWM control system timing chart

1.4.3 DBF (Dynamic Beam Focus) circuit

Since the display is flattened, the focus becomes unequal between the center and circumference of the picture. To compensate for it, it is necessary to superimpose the parabola voltage of 370Vp-p in the horizontal cycle with the static focus (with the horizontal width is 396mm) and the parabola voltage of 145Vp-p in the vertical cycle. The slight voltage that is generated from the parabola voltage generating circuit is amplified and reversed to generate the high voltage in order to keep the focus equal. This circuit is called DBF circuit.

As shown in Fig. (16), the circuit is composed of the parabola voltage generating circuit IC700, amplifier section IC7A0 in the front step, Q6E1 to Q6E6 of amplifier section in the rear step, T6E1, and so on.

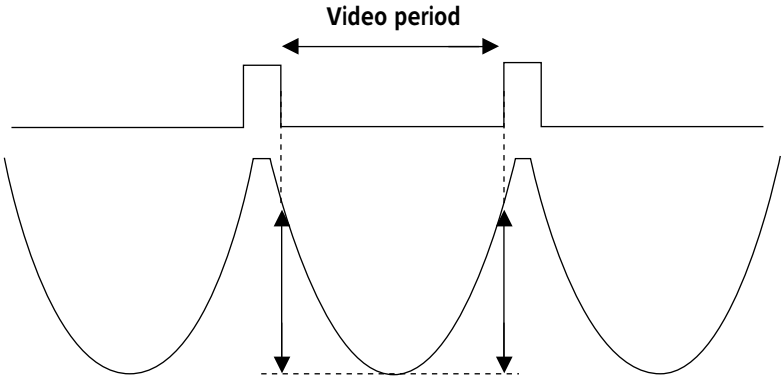

In case of the horizontal DBF :370Vp-p
In case of the vertical DBF :145Vp-p

Figure 15

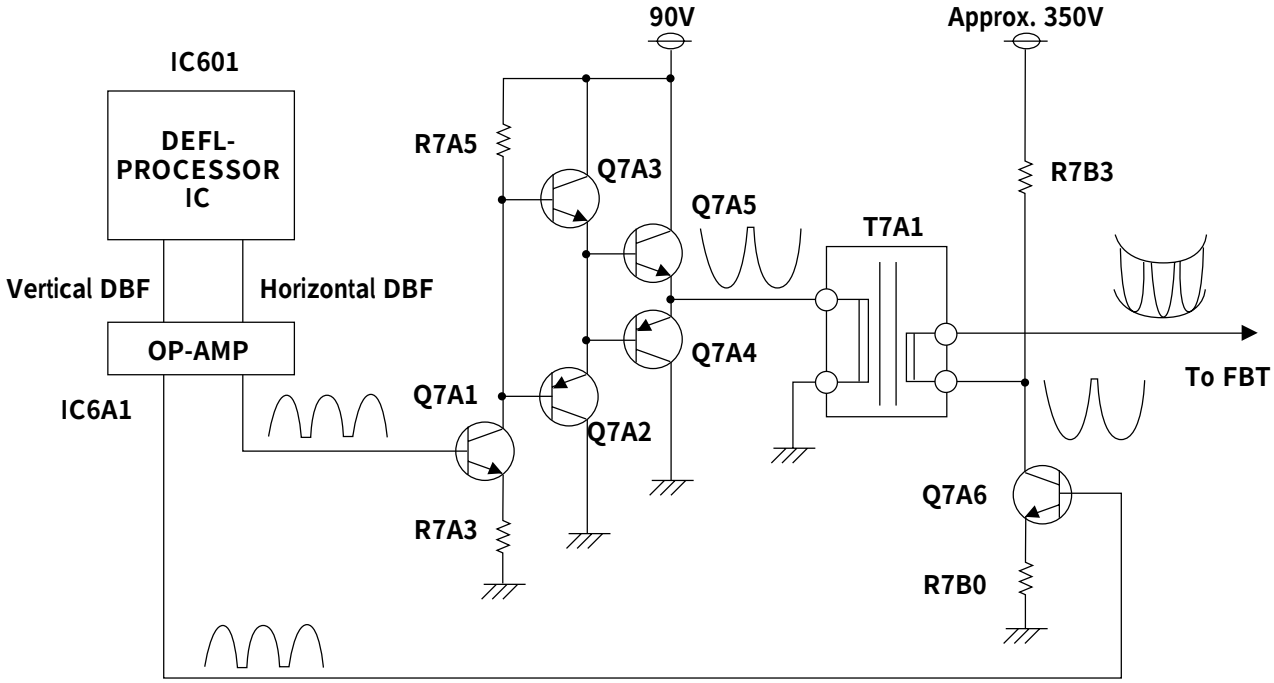

Figure 16

After the horizontal and vertical DBF voltage are separately generated, they are amplified and are finally composed.

<Horizontal section>

The voltage (approx. 0.5Vp-p) of the parabola waveform shown in Fig. (a) is output from the deflection processor IC (IC601), and is amplified approx. 14 times by OP-AMP (IC6A1). Thereafter, it is amplified to 50 to 60Vp-p by the transistor (Q7A1 to Q7A5). The amplification ratio is determined by the ratio between the resistors R7A3 and R7A5, being approx. 8 times. Moreover, the waveform is reversed as shown in Fig. (b) at this time. Then, it is amplified to approx. 500Vp-p by DBF transformer (T7A1). The coil ratio between the primary and secondary coils of the DBF transformer is 1: 10, being the amplification ratio of approx. 10 times.

<Vertical section>

The voltage (approx. 1.0Vp-p) of the parabola waveform shown in Fig. (a) is output from the deflection processor IC (IC601), and is amplified approx. 4 times by OP-AMP (IC6A1). Thereafter, it is amplified to approx. 160Vp-p by the transistor (Q7A6). The amplification ratio this time is determined by the ratio between R7B0 and R7B3, being approx. 40 times.

The horizontal and vertical DBF voltages amplified and reversed are composed by applying vertically synchronous modulation to the output on the secondary side as shown in Fig. (c). The composed voltage is input to Pin 12 of the flyback transformer (T701).

Figure (a)

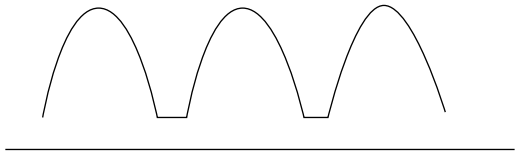

Figure (b)

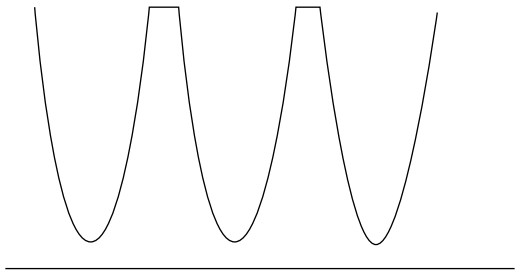

Figure (c)

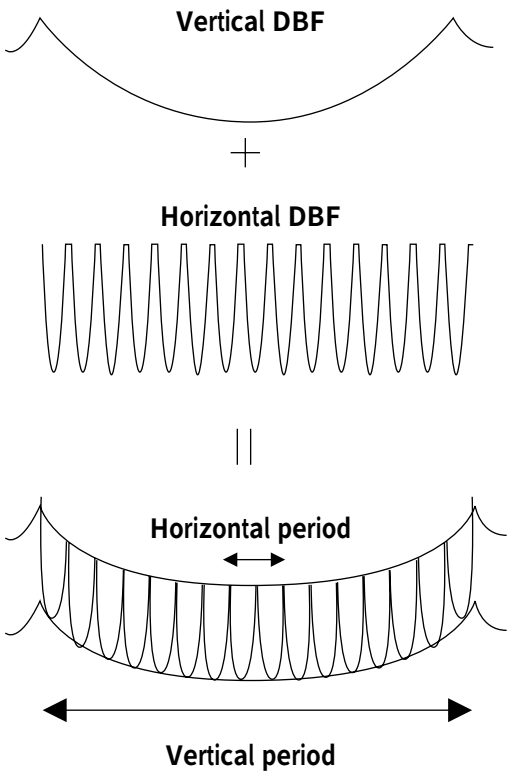

1.5 CRT compensation block

1.5.1 Rotation circuit

The rotation circuit is a circuit to compensate the picture inclination caused by the earth magnetism by letting DC current flow to the rotation coil wound on the front side of DY for adjustment. It is controlled to 0 to 5V with the reference of 2.5V by IC103 pin 3 (PWM_DAC), and DC current of +/-90mA (max) is made to flow to the rotation coil by IC803 pin 2.

1.5.2 Corner purity circuit

The corner purity circuit is a circuit to compensate for the color shade and color deviation of the picture corner. On the rear side of CRT, it is adjusted by DC current flowing to the corner purity coils installed in the four corners on the display surface.
The compensation circuit is composed of the following four functions of (1) User adjustment (OSM display), (2) Aging variation compensation, (3) High/low temperature drift compensation and (4) Southern / Northern horizontal magnetic field landing cancellation.

(1) User adjustment (OSM display)
The user causes DC current of +/-60mA (max.) to flow to the purity coil of each corner according to the value displayed on OSM.

(2) Aging variation compensation
As the electronic beam collides with the aperture grille, it is thermally expanded and contracted. The thermal expansion/contraction is varied according to the elapse of the power ON/OFF time of the monitor. The color shade and deviation of the picture corner thus generated are automatically adjusted.
The voltage of the beam current supply pin (T701 pin 9) is detected with R710/R711, and the voltage that detects the time elapse of the power ON/OFF of the monitor is read from the CR charge (integration) circuit composed of C711 and R716 and CR discharge (integration) circuit, composed of C711 and R717 through IC701 (buffer amplifier) by IC103 pin 15 (CPU_ADC), and the DC current of +/-17mA(max) flows to the purity coil on each corner according to the specified control program.

(3) High/low temperature drift compensation
The front panel (glass) is thermally expanded and contracted as the temperature varies in the installation environments of the monitor. The color shade and deviation of the picture corner are automatically adjusted. The voltage that detects the temperature variation of the installation environments of the monitor is read from the environment temperature detection circuit composed of TH101 (thermistor) arranged near the front panel (glass) by IC103 pin 13 (CPU_ADC), and DC current of +/-13mA (max) is made to flow to the purity coil on each corner according to the specified control program.

(4) North-south horizontal field landing cancel
The north-south horizontal field landing cancel carries out automatic adjustment of color shading and color shift occurring appeared in the opposite derection at the top and bottom end of the monitor display surface in the horizontal direction.
The detecting voltage and direction of the north-south horizontal field (IC214 pin 2) are detected by IC214 (geomagnetic sensor unit), the detecting voltage is read by IC103 pin 19 (CPU_ADC), and the direct current of ±20mA (max) flows in each corner purity coil according to the specified control program. (Four-corner interlock control)

- The left upper corner on the display surface is controlled with 0 to 5V of 2.5V reference by IC103 pin 4 (PWM-DAC), and the DC current of the above value is made to flow to the purity coil on the left upper corner by IC802 pin 2.

- The right upper corner on the display surface is controlled with 0 to 5V of 2.5V refer ence by IC103 pin 5 (PWM-DAC), and the DC current of the above value is made to flow to the purity coil on the right upper corner by IC802 pin 8.
- The left lower corner on the display surface is controlled with 0 to 5V of 2.5V reference by IC103 pin 6 (PWM-DAC), and the DC current of the above value is made to flow to the purity coil on the left lower corner by IC801 pin 2.
- The right lower corner on the display surface is controlled with 0 to 5V of 2.5V reference by IC103 pin 7 (PWM-DAC), and the DC current of the above value is made to flow to the purity coil on the right lower corner by IC801 pin 8.

1.5.3 Earth magnetism cancel circuit

The earth magnetism cancel circuit has a south-north horizontal magnetic field canceling function.

IC214 (earth magnetism sensor unit) detects the voltage and direction of the south-north horizontal magnetic field (IC214 pin 2), and IC103 pin 19(CPU_ADC) reads the detected voltage to automatically control the following canceling function according to the specified control program.

Here, the output voltage of IC214 (earth magnetism sensor unit) operates as follows.

- South-north horizontal magnetic field (IC214 pin 2): 0.8V(-0.04mT) to 2.5V(+/-0.00mT) to 4.2V(+0.04mT)

<South-north horizontal magnetic field canceling function>

(a) Horizontal magnetic field landing cancel

The horizontal magnetic field landing cancel circuit is a circuit to compensate for the color shade and deviation that appear in the horizontal direction that becomes the opposite direction at the upper and lower ends on the monitor display surface, and the automatic adjustment is done by DC current flowing to the corner purity coil that is wound around the display surface. (synchronized control for four corners)

(Refer to 1.5.2 (4) for detail.)

(b) Horizontal magnetic filed convergence cancel

The horizontal magnetic field convergence cancel circuit is the circuit to compensate for the misconvergence that results after the vertical convergence of RED and BLUE in the whole display area of the monitor deteriorates, and it is automatically adjusted by DC current flowing to the 4V convergence compensation coil mounted on DY. It is controlled with the DC component (V-CONVERGENCE) by IC601 pin 60 (4V_SC), and DC current of +/-30mA (max) is flowen to the 4V convergence compensation coil by IC8A1 pin 6 (Power Opamp).

1.5.4 Vertical magnetic field landing cancel circuit

The vertical magnetic field landing cancel circuit is the circuit to compensate for the color shade and deviation that reaches its maximum at the center in the horizontal axis direction and its minimum at the upper and lower ends on the monitor display surface, and the adjustment is done by DC current according to the value displayed on OSM flowing to the speed modulating coil installed in the neck part of CRT.

It is controlled with 0 to 5V of 2.5V reference by IC211 pin 26 (DAC), and DC current of +/-140mA (max) is made to flow to the speed modulating coil by IC803 pin 8.

1.5.5 Digital dynamic convergence clear (DDCC) circuit

In the digital dynamic convergence clear (hereafter called DDCC) circuit, the convergence compensating current waveform is produced and amplified, and the convergence is compensated by the compensation current flowing to the sub yoke that is installed as the rear unit of the deflection yoke.

Though the principle of the convergence compensation with the sub yoke is same as the CP ring, the CP ring is used for the static variation with the parallel movement in the whole picture in the uniform magnetic field with the permanent magnet but the sub yoke is used for dynamic variation that compensates a desired position on the picture by controlling the current waveform that flows to the coil of the electric magnet.

(See Fig. 18)

(1) Production of compensation current waveform

There are 30 kinds of compensation elements, and they are programmed in IC601(CP267P151=uPD61882BGC) one by one by using the functions. The amplitude of the current is controlled by inputting the compensation coefficient into the function.

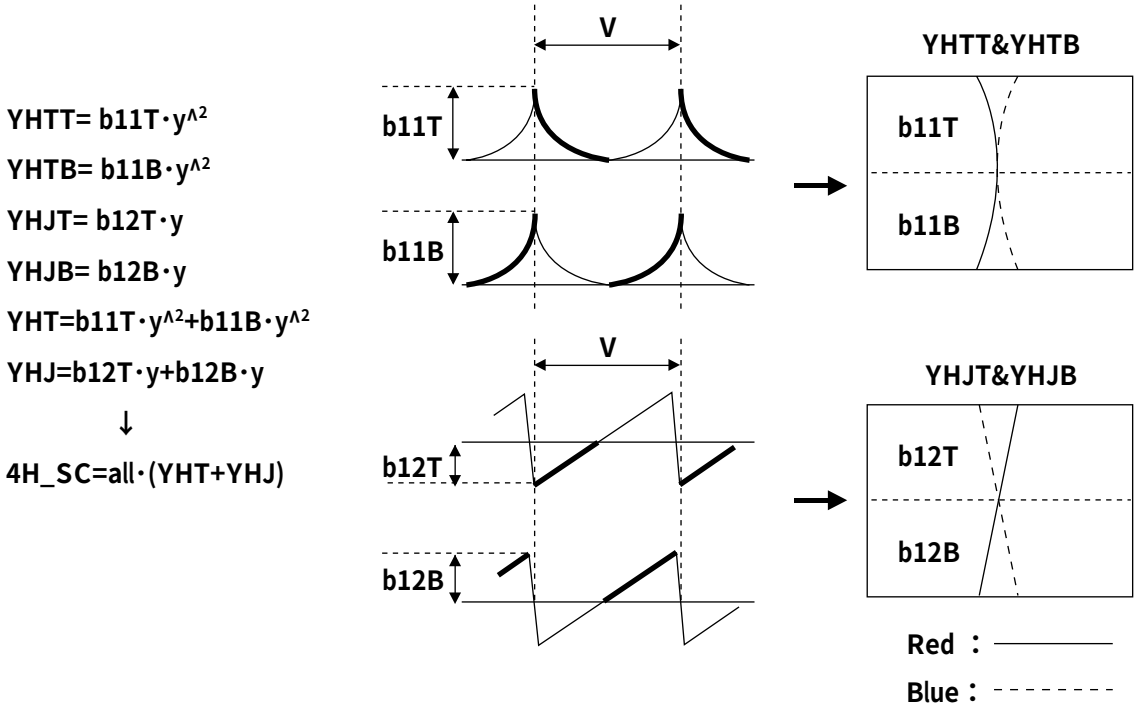

Figure 17 DDCC compensation image

Examples of the functions and current waveform/compensation operation of YH(YHTT, YHTB, YHJT, YHJB) are shown as follows.

In the above formulas, b11T, b11B, b12T and b12B express the compensation coefficients, and y and y^2 express the primary and secondary functions of the vertical frequencies. The other parts except the compensation coefficients are programmed, and desired amplitudes (= compensation amount) are gained by varying the coefficients.

YHTT and YHTB compensate the upper and lower parts of the picture of the characteristic components of their DYs to compensate the upper and lower parts of the picture of the axis deviation component. The component gained by adding YHT and YHJ is multiplied by the offset compensation coefficient a11. The resultant component is regarded as 4H_SC, and is output from IC601 (CP267P151=uPD61882BGC) pin 61.

(2) Waveform, and operation on the picture

The case in which the currents flow through 4H coils of the sub yoke is explained. Regarding YHT (secondary function in the vertical frequency), in case of Fig 17 as an example, the current is large in the same direction at the start (upper end of the picture) and the end (lower end of the picture) of the vertical frequency, and is zeroed on the X axis of the picture. Therefore, the magnetic field that is proportional to it is generated, and RED and BLUE vary in the same direction only at the upper and lower ends of the picture. As aforementioned, YHT can be independently controlled at the upper part (b11T.y^2) and lower part (b11B.y^2).

Moreover, regarding YHJ (Primary function in the vertical frequency), if the flowing direction of the current is opposite at the start (upper end of the picture) and the end (lower end of the picture) of the vertical frequency as an example, RED and BLUE vary in the opposite direction only at the upper and lower ends of the picture. Compensation in the vertical direction can be done by making the current flow to the 4V coil.

Fig.19(a) and (b) shows the image of each adjustment item of the DDCC adjustment.

(3) Adjustment method

Before the adjustment with the compensation circuit, it is necessary that they are properly adjusted at the center (H-STATIC and V-STATIC), on the X axis (XH slider, B-Bow 4P, XV differential coil) and on the Y axis (YH volume, YV volume).

Though DC current is superimposed on the sub yoke, H-STATIC and V-STATIC are pushed to the greatest possible extent by the adjustment with CP ring in order to reduce the stress of the driver IC8A1 (STK391-110).

Moreover, since 4H and 4V coils alone are installed on the chassis, it is first necessary that the convergence of RED, BLUE and GREEN (6H, 6V) satisfy the specifications for the performance of ITC(CRT&DY).

As the adjustment procedure, the adjustment values of 30 elements are not respectively zeroed but they are adjusted to nearest to zero with a total balance in good order.

In other words, the balance (compromise) adjustment with each adjustment item is applied.

The correspondence of the names of DDCC adjustment mode to the coefficients of all 30 elements is shown below.

＜Factory mode＞

4H Coil	b11T	YHTT	y^2	b11B	YHTB	y^2	b12T	YHJT	y	b12B	YHJB	y
	b21L	XHL	x^2	b21R	XHR	x^2						
	b31TL	S3HTL	x^2 • -(y^3+y^4+y^5+y^6)	b31TR	S3HTR	x^2 • -(-y^3+y^4+y^5+y^6)	b31BL	S3HBL	x^2 • -(-y^3+y^4-y^5+y^6)	b31BR	S3HBR	x^2 • -(-y^3+y^4-y^5+y^6)
	b41TL	PQHTL	x^2 • y^4	b41TR	PQHTR	x^2 • y^4	b41BL	PQHBL	x^2 • y^4	b41BR	PQHBR	x^2 • y^4
4V Coil	c11T	YVTT	y^2	c11B	YVTB	y^2	c12T	YVJT	y	c12B	YVJB	y
	c21L	XVL	x^2	c21R	XVR	x^2						
	c31TL	S3VTL	x^2 • -(y^3+y^4+y^5+y^6)	c31TR	S3VTR	x^2 • -(-y^3+y^4+y^5+y^6)	c31BL	S3VBL	x^2 • -(-y^3+y^4-y^5+y^6)	c31BR	S3VBR	x^2 • -(-y^3+y^4-y^5+y^6)
	c41TL	PQVTL	x^2 • y^4	c41TR	PQVTR	x^2 • y^4	c41BL	PQVBL	x^2 • y^4	c41BR	PQVBR	x^2 • y^4

＜User & Factory mode＞

4H Coil	a11	H-CONVERGENCE	DC
4V Coil	a12	V-CONVERGENCE	DC

Table 5

(4) Block diagram

Fig. 20 shows the block diagram of the DDCC circuit.

The components 4H_DC(pin 6), 4H_SC(pin 61), 4V_DC(pin 8) and 4V_SC(pin 60) supplied from IC601(CP267P151=uPD61882BGC) to 4H-Coil and 4V-Coil are output, the dynamic component (4H_DC, 4V_DC) is amplified with IC6A1(TL084), and the static component (4H_SC, 4V_SC) is amplified with IC6A2(KIA4558).

DCC(pin 7) output from IC601 (CP267P151=uPD61882BGC) and DEFL_+3.3V(pin 3) output from IC602 (TA48M033F) are respectively the reference voltage of Op-Amp(IC6A1:TL084) that amplifies the above dynamic component (4H_DC, 4V_DC) and the reference voltage of Op-Amp(IC6A2:KIA4558) that amplifies the static component (4H_SC, 4V_SC).

On each of 4H and 4V, the waveform added with the dynamic component and static component is input to IC8A1 pin 3 and pin 4 (STK391-110) allow the specified current to flow to each convergence compensation coil.

For four poles magnetic field

Static change by the eternal magnetic field (Parallel shifting totally)	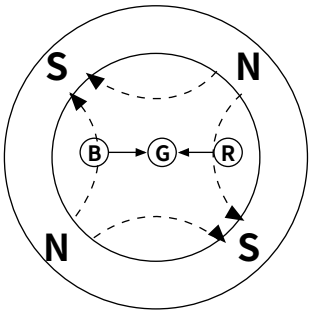	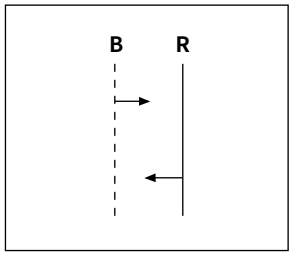
	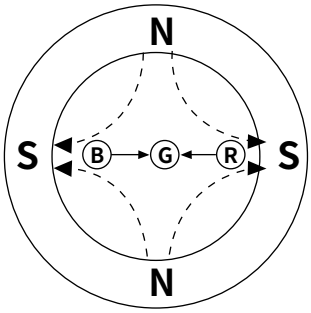	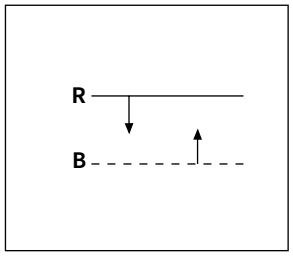
Dynamic change by electromagnet (Compensate at the optional position on the picture.)	4H coils 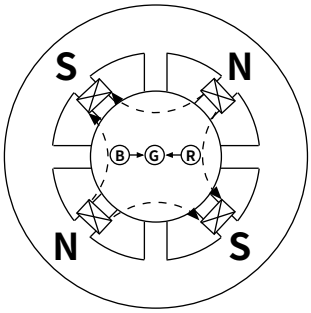	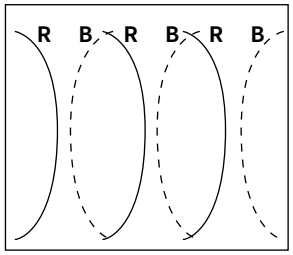 YHT compensate
	4V coils 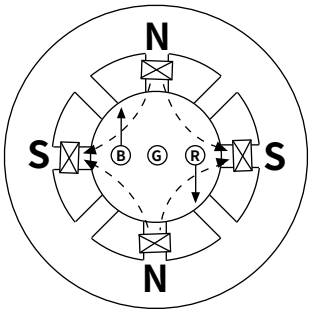	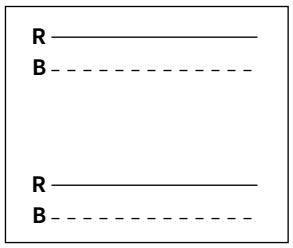 YVT compensate

Figure 18 The principle of DDCC compensation

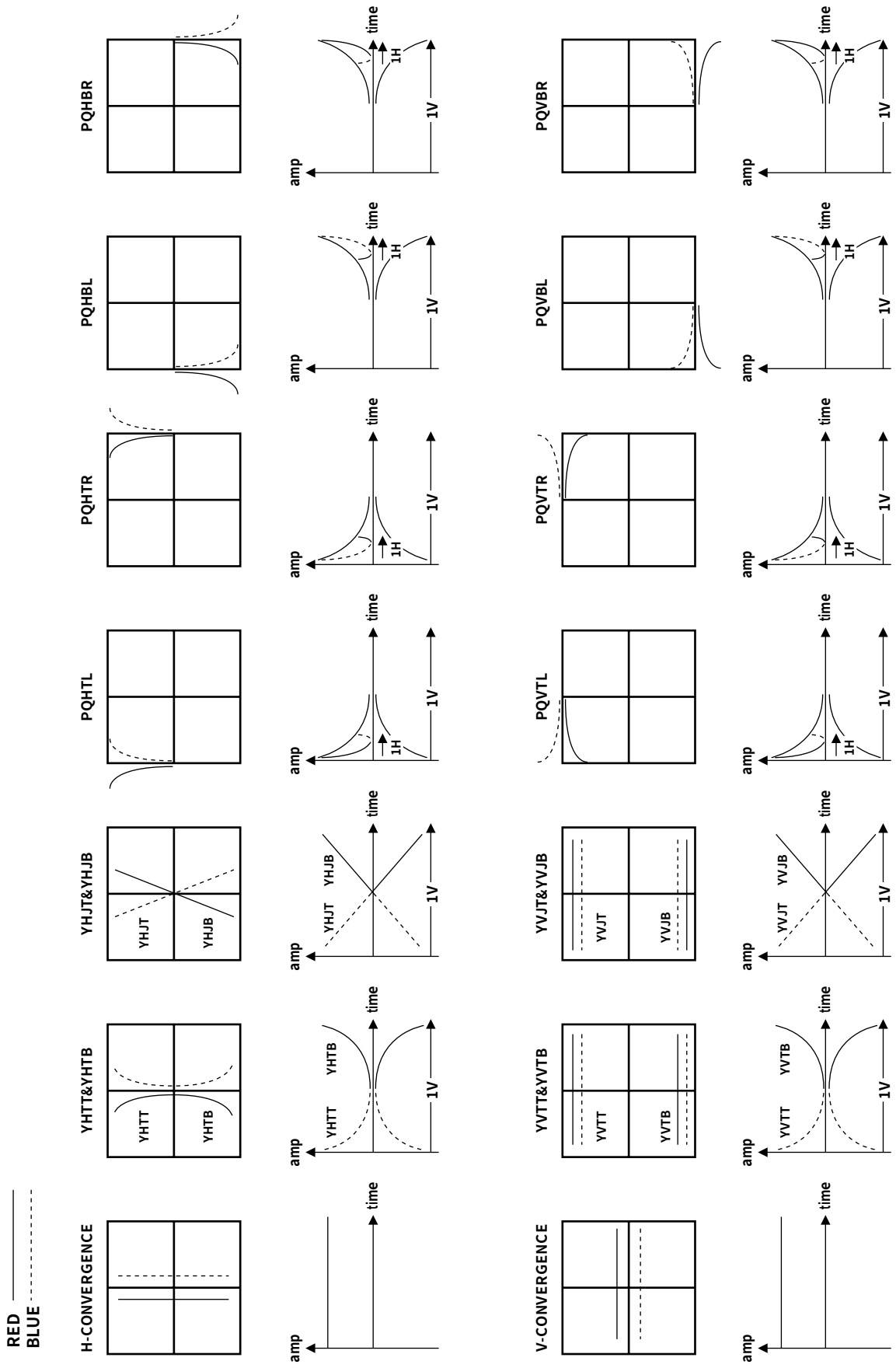

Figure 19 (a) DDCC adjustment item

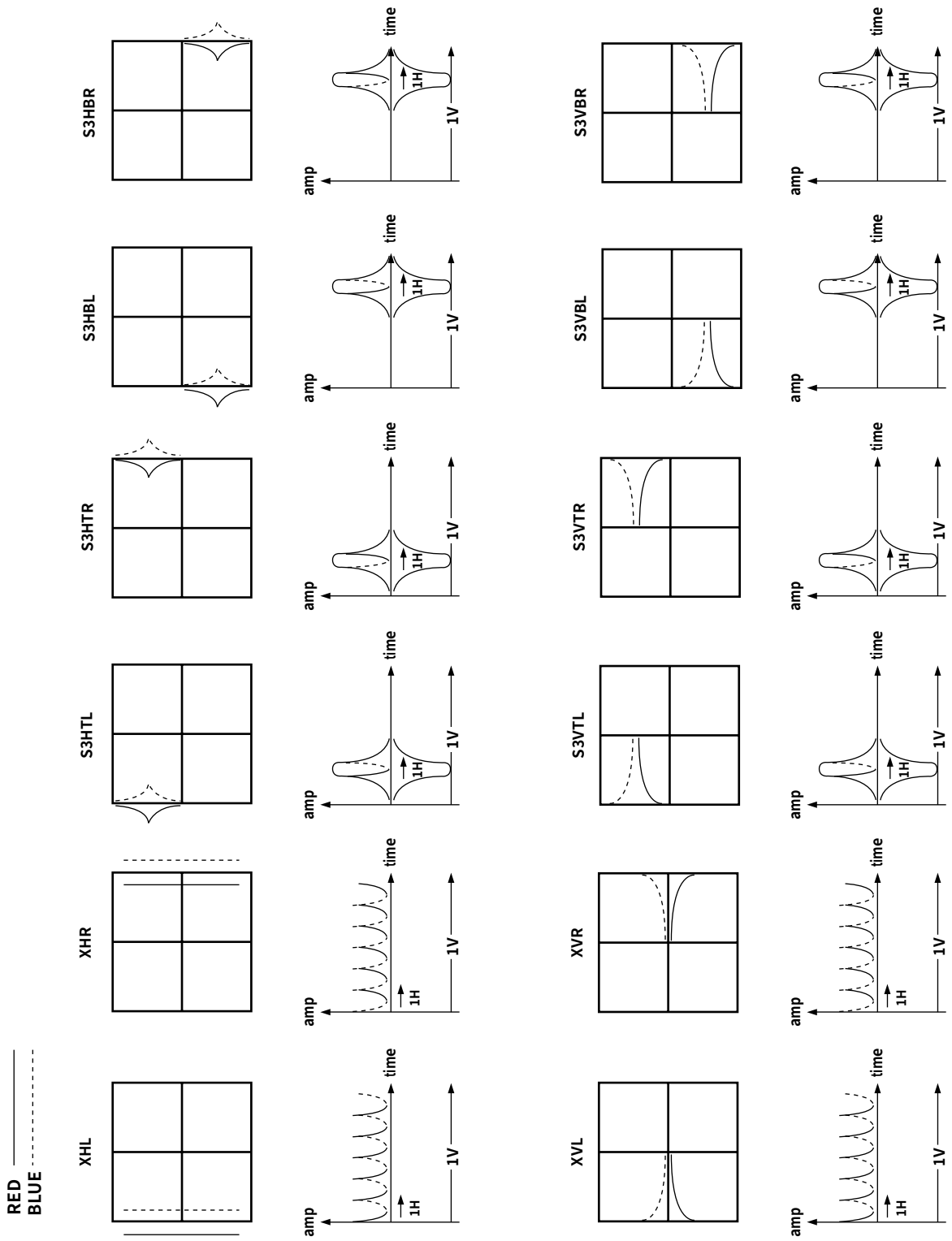

Figure 19 (b) DDCC adjustment item

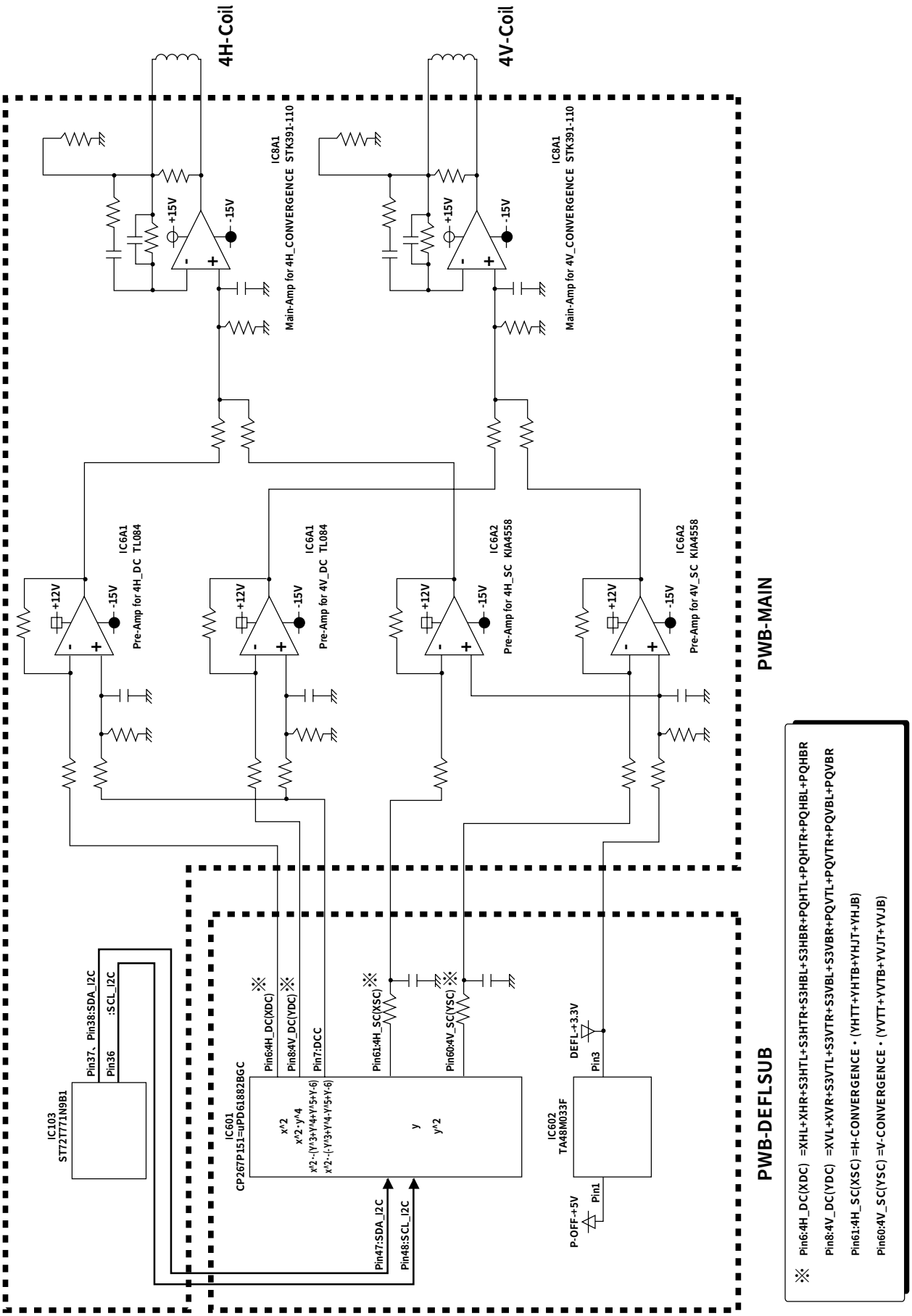

Figure 20 DDCC circuit diagram

1.6 Control block

The control block is composed of the following:
Monitor MPU IC103 to process the sync. signals, control the inside of the monitor and communicate with the external, EEPROM IC105 to memorize the picture adjustment values, etc.

1.6.1 Sync. signal process

When HSYNC or Composite Sync is input from the VIDEO board to the MPU IC103 pin 30 and VSYNC is input to the MPU IC103 pin 20 the frequency/polarity of SYNC will be discriminated. Then, HS_OUT will be output from pin 27 for beam deflection and OSM display and VS_OUT will be output from pin 26 as the polarity POSI.
If SYNC is not input or abnormal SYNC is input, the MPU IC103 will output simulative SYNC. The frequency of the simulative SYNC is near that of the previously input SYNC.
(Initial values: FH:31kHz and FV:60Hz)

1.6.2 Front button

When any tact switch of SW1A0 to SW1A8 on the front panel is pressed, the voltage of +5V will be divided with the resistor according to the button.
The signal is converted into the digital value with the A/D converter of the MPU IC103 pin 12 and pin 13 to discriminate which button is pressed.

1.6.3 I2C bus control

The IC control inside the monitor is carried out using pin 36: SCL-I2C, pin 37 and pin 38: SDA-I2C I2C bus.
The adjustment data corresponding to the input timing is read out from EEPROM and transmitted to each IC. At normal state, the SW-I2C signal of IC103 pin 28 is HI, turning Q102, Q103 and Q104 ON, enabling data transmission to IC601, IC211 and IC212. At POWER SAVE, however, since the power supply P_OFF_+5V of IC601, IC211 and IC212 is OFF, the SW-I2C signal turns to LO, switching Q102, Q103 and Q104 OFF. This shuts off the connection between I2C bus and IC601, IC211 and IC212, not affecting adversely the data communication (send-receive) with IC105 (EEPROM).
The IC103 pin 39 is a write protect signal of EEPROM IC105. At normal state (when data is not written onto EEPROM), this signal is HI. When data is written onto EEPROM, this signal turns to LO.
With the SDA_I2C (input) of IC103 pin 38 turned to LO level for 2 seconds or more, the system regards the situation as I2C bus error, bringing the system forcibly to POWER SAVE state.

Table 6 Slave address list

Item	Source	ADR(BIN)
EEPROM	IC105	1010****
Deflection processor	IC601	11011100
Preamplifier	IC211	10001000
OSM	IC212	01111100

1.6.4 Power control

The normal state and power management state are switched according to pin 33 P-OFF signal and pin 32 P-SUS signal.
"Power save" of the OSM adjustment item is turned to "ON", and the power management is activated when either H/VSYNC goes out.
In the power management mode, P-OFF+5V is turned OFF by setting pin 33 P-OFF signal at HI, other power supplies except +5V and heater are turned OFF by setting pin 32 P-SUS signal at LOW.

Moreover, if pin 24 PRO signal is at HI for 1 second or more, it will be regarded as a short circuit of the power of the secondary side to forcibly turn ON POWER SAVE in order to prevent trouble from being escalated.

1.6.5 Heater control

The heater voltage is controlled by PWM pulse HEATER ON/OFF signal of IC103 pin 8.
The HEATER signal, dividing the heater voltage with R153 and R155, is input into the A/D converter of IC103 pin 18. The IC103 carried out feedback control of HEATER ON/OFF signal, so that the HEATER signal attains the specified voltage. The specified voltage of HEATER signal is {5 * (EEPROM address 0x023 value) / 256} (V) at normal state and {5 * (OSM item HEATER) / 256} (V) at POWER MANAGEMENT.
When the HEATER signal deviates from the specified voltage by ±0.5V for 1 second or more, the situation is judged as heater error, bringing the system forcibly to POWER SAVE mode.

1.6.6 ABL, Beam Protector

The feedback signal ABL of the beam current is input into IC103 pin 16.
In case the signal ABL exceeds the voltage level given below, the contrast setting of the preamplifier IC211 is lowered down to prevent the excessive flow of the beam current.
ABL specified voltage: {5 * (OSM item ABL) / 256} (V)
Further, in case the signal ABL exceeds the 4.7 V level continuously for 2 seconds or more, the situation is judged as circuit error, bringing the system forcibly to POWER SAVE mode.

1.6.7 CRT support

The signal that divides the P_OFF_+5V at the thermistor TH100, R135 and R136 is input into the A/D converter of IC103 pin 14 and converted into digital value. Thus, the temperature inside the monitor is detected.
The monitor ON time signal BEAM TIME is input into the A/D converter of IC103 pin 15 and converted into digital signal to detect the monitor ON time.
In order to cancel the deterioration in purity and convergence due to the aforesaid temperature and variation with time, the cancel current is passed to each C_PURITY.
Each C_PURITY and ROTATION controls the PWM DAC output (pin 3 to pin 7) of IC103 by means of the signal smoothened by R and C.
VPURITY is controlled by the DAC output of IC211 pin 26.

1.6.8 High voltage control

The high output voltage control is carried out by means of HV-ADJ signal smoothening the PWM DAC output of the microcomputer IC103 pin 9 using R117 and C103.
The high voltage feedback signal X-PRO is input into the A/D converter of IC103 pin 17. When this voltage exceeds the specified level for 600 msec or more, the situation is regarded as high voltage error, setting the monitor to POWER SAVE mode.
The specified voltage level is obtained from {5 * (OSM item XPRO LEVEL) / 256} (V)

1.6.9 Display Data Channel

FE1250+ supports DDC2B/DDC2Bi.

DDC2B: IC217 of PWB-VIDEO supports DDC2B.

IC217 operates by the power +5V inside the monitor or by the power of D-SUB connector J215 pin 9. Therefore, if 5V power is supplied to J215 pin 9, EDID can be read even if the main power of monitor is turned OFF.

When the main power of monitor is turned OFF, the bases of Q2C0, Q2C1, Q2C2 and Q2C3 become LO. Therefore, connection with IC103 (microcomputer) can be cut by making these transistors OFF in order not to disturb communication between IC217 and PC.

DDC2Bi: IC103 (microcomputer) supports DDC2Bi. Automatic adjustment applied in the factory also uses this function.

For common users to use this function, the special VIDEO adapter and application are required.

Table 7 IC103(MPU) Pin assignment

PIN#	FUNCTION	ASSIGNMENT	PIN#	FUNCTION	ASSIGNMENT
1	DA0	BRT(D/A)	56	VPP/TEST	GND
2	DA1	LIN(D/A)	55	IRIN	GND
3	DA2	ROTATION(D/A)	54	NOT(RESET)	RESEI(IN)
4	DA3	CP-TL(D/A)	53	PA0	CS1(OUT)
5	DA4	CP-TR(D/A)	52	PA1	CS2(OUT)
6	DA5	CP-BL(D/A)	51	PA2	CS3(OUT)
7	DA6	CP-BR(D/A)	50	PA3	CS4(OUT)
8	DA7	HEATER ON/OFF(D/A)	49	PA4	CS5(OUT)
9	DA8	HV-ADJ(D/A)	48	PA5	CS6(OUT)
10	VSSA	GND	47	PA6	SW-VLIN1(OUT)
11	VDDA	+5V	46	PA7/BLANKO	SW-VLIN2(OUT)
12	PB7/AN7	KEY1(A/D)	45	OSCIN	OSCIN
13	PB6/AN6	KEY2(A/D)	44	OSCOUT	OSCOUT
14	PB5/AN5	THERM(A/D)	43	USBVCC	DEGAUSS(OUT)
15	PB4/AN4	BEAM-TIME(A/D)	42	USBDP	NC
16	PB3/AN3	ABL(A/D)	41	USBDM	NC
17	PB2/AN2	X-PRO(A/D)	40	USBGND	NC
18	PB1//AN1	HEATER(A/D)	39	PC7/TDO(SCI)	WP(OUT)
19	PB0/VFBACK/AN0	NOT USED(A/D)	38	PC6/RDI(SCI)	SDA-I2C(IN)
20	VSYNCI1	V-SYNC(IN)	37	PC5/SDAI(I2C)	SDA-I2C(OUT)
21	PD7/VSYNCI2/ITD	HSK(OUT)	36	PC4/SCLI(I2C)	SCL-I2C(OUT)
22	PD6/CLAMPO	CLP(OUT)	35	PC3/SDAD(DDC)	SDA-DDC(SIO)
23	PD5/ITA	LOCK(INT)	34	PC2/SCLD(DDC)/RX	SCL-DDC(SIO)
24	PD4/ITB	PRO(IN)	33	PCI/HSYNCI2	P-OFF(OUT)
25	PD3/ITC	SPARK(INT)	32	PC0/OCMP/HFBACK	P-SUS(OUT)
26	PD2/VSYNCO	VS-OUT(OUT)	31	VDD	+5V
27	PD1/HSYNCO	HS-OUT(OUT)	30	HSYNCI1	H-SYNC(IN)
28	PD0/CSYNCI	I2C-SW(OUT)	29	VSS	GND

1.6.10 LED

J100 pin 1 is connected to the anode of the green LED, J100 pin 3 is connected to the anode of the orange LED, and pin 2 is connected to the cathodes of both. Since P_OFF_+5V is normally supplied, the current flows to J100 pin 1 to turn OFF Q100. Therefore, any current does not flow to J100 pin 3.

(The green LED only is lit.)

Since P_OFF_+5V is turned OFF in the power management mode, no current is flowed to J100 pin 1 to turn ON Q100. Therefore, the current flows to J100 pin 3. (The orange LED only is lit.)

1.6.11 Clamp pulse

The clamp pulse signal CLP is output from pin 22 of the MPU IC103 with the polarity POSI. When "1" is selected in the OSM adjustment item "EDGE LOCK", the signal triggered at the rear edge of HSYNC is output, and when "2" is selected, the signal triggered at the front edge of HSYNC is output.

1.6.12 SPARK

If it is electrically discharged in the CRT tube, the GND level of the high-voltage system circuit is considerably varied. GND of this high-voltage system is connected to the MPU IC103 pin 25 via C139. The voltage level of IC103 pin 25 is normally set at HI. If GND in the high-voltage system varies since it is electrically discharged in the CRT tube, the current will flow to R161 to set IC103 pin 25 at the LO level. Pin 25 is the external interrupt terminal that detects the trailing edge. When the trailing edge is detected, the MPU forcibly applies S/W RESET. (It is the same as when the power SW is turned ON.)
The above operation prevents the monitor from going out of control when it is electrically discharged in the CRT tube.

1.6.13 Avoidance operation during input SYNC switching

The horizontal LOCK output signal of the deflection processor IC601 pin 46 is connected to the MPU IC103 pin 23. IC103 pin 23 is the external interrupt terminal of the trailing edge detection. Though the voltage level of the LOCK signal is normally set at HI, IC600 outputs LO when the horizontal deflection lock is released since the input SYNC is switched.
When the MPU detects the trailing edge, the HSK signal of IC103 pin 21 is set at HI, and the simulative SYNC that is near the original frequency is output from pin 30 and pin 20. HSK signal is used to set +B, voltage at MIN.
This reduces the stress when the input SYNC is switched for a short time.

1.6.14 Vertical linearity switch

The frequency characteristics of the vertical linearity are compensated by pin 47 SW_VLIN1 and pin 46 SW_VLIN2 output signals of the MPU IC103.
The switching patterns are shown in the table below.

Table 8 SW_VLIN1, SW_LIN2 select pattern

Vertical frequency	SW_VLIN1 Pin47	SW_VLIN2 Pin46
50Hz～73Hz	LO	LO
73Hz～90Hz	HI	LO
90Hz～125Hz	LO	HI
125Hz～160Hz	HI	HI

1.6.15 H/W RESET

The +5V power is connected to pin 1 of the voltage detector IC101, and IC101 pin 3 output is connected to the MPU IC103 pin 54.
On the voltage detector, pin 3 is the open drain output, being turned OFF when pin 1 voltage is 4.2V or more, and ON when it is 4.2V or less. When the power switch is turned ON, IC101 pin 3 is turned ON and the MPU pin 54 level is set at 0V since +5V has not started up.
When the voltage of IC101 pin 1 becomes 4.2V or more, IC101 pin 3 will be turned OFF, and the voltage of the MPU pin 54 rises with the time constants of R101 and C100.
When the voltage of the MPU pin 54 becomes 3.5V or more, the MPU will start operating.

1.6.16 Oscillation circuit

The crystal oscillator X100 is connected to the MPU IC103 pin 45 and pin 44. Pin 45 is the clock input, and pin 44 is the amplification circuit output in the MPU. The operation frequency of the crystal oscillator is 24MHz. The basic clock is divided in the MPU to operate the program and circuits of the MPU.

1.7 Software

1.7.1 Outline

(1) Input frequency

- •Horizontal : 30kHz to 110kHz (Lower limit : 29.5kHz, Upper limit: 112kHz)
- •Vertical : 50Hz to 160Hz (Lower limit: 47Hz Upper limit: 162Hz)

(2) Memory timing number

- •Preset timing : 9 timing (12 timing max.)
- •User timing : 15 timings can be memorized.

1.7.2 Frequency variation detection function

At normal signal input, this function checks the input frequency and polarity per VSYNC input and judges that input signal has been transmitted if the conditions a, b and c given below are satisfied 5 times continuously against the first synchronous signal state.

Condition a: There is no change in the input synchronous signal polarity both in horizontal and vertical directions.

Condition b: The horizontal frequency difference is less than 0.4kHz.

Condition c: The vertical frequency difference is less than 0.4Hz.

On detecting the change in input signal, this function compares, in the order given below, the directory data written in EEPROM with the directory data of the input signal before reading and outputting the screen data.

(1) If the input signals satisfy conditions a, b and c, they are judged to be the same as the signals registered in the directory, and the timing data are read from EEPROM and are output.

Condition a: The polarities of the input sync. signal are the same in both horizontal and vertical directions.

Condition b: Horizontal frequency difference is 0.6kHz

Condition c: Vertical frequency difference is 0.6Hz.

The sequence of the compared directories is as follows:

PRESET1 → PRESET2 → ••• → PRESET12 → USER1 → USER2 → ••• → USER15

If the same timing is judged on the way, the comparison work is stopped there, and the adjustment value for each corresponding timing is read out from EEPROM.

(2) If the conditions of (1) are not satisfied (when the new timing is input), the horizontal frequency reads the backup picture data of the nearest preset timing and outputs it.

1.7.3 Memory of user timing

The new timing is input. When the picture adjustment is executed, the directory data (frequency and polarity) and picture data will be memorized in EEPROM.

If 15 user timings (MAX) are memorized, the memory of the oldest user timing (directory data and picture data) is deleted, and the new timing information is memorized there.

USER1 → USER2 → ••• → USER15 → USER1 → USER2 → ••• →

1.7.4 Picture adjustment

(1) The monitor has the function to do the picture adjustment with OSM and communication. The function has the following adjustment modes.
   a: Normal mode
   b: Factory mode
   For entry into each adjustment mode, refer to Item "Adjustment method".

(2) High voltage adjustment supplement
   The high voltage of the normal time is determined with "HV-ADJ" setting value of OSM adjustment item and the voltage of high voltage protect is determined with "XPRO-LEVEL" setting value of the OSM adjustment item. To adjust the voltage of high voltage protect, it is necessary to raise the high voltage to 30KV once.
   To temporarily raise the high voltage, "HV-TMP" of OSM adjustment item is used. Since "HV-TMP" is not memorized in EEPROM, the high voltage will return to the normal ("HV-ADJ" setting value) when the power is turned OFF once. Even if the page of the high voltage adjustment of OSM is skipped with the select button, it will similarly return to the normal high voltage.

(3) If high voltage protector activates even in the normal state because XPRO-LEVEL is excessively lowered by mistake, the XPRO-LEVEL and HV-ADJ adjustment values can be initialized using the following procedure.
   (a) Input the image signal to the monitor.
   (b) Keeping both PROCEED and RESET buttons pressed, turn ON the power.
   (c) Keep both PROCEED and RESET buttons pressed for approx. 30 seconds or more.
   (d) Release PROCEED button only.
   (e) Keep RESET button only pressed for 15 seconds or more.
   (f) When it is successfully completed, the monitor will drop to POWER SAVE. (LED pattern changes.)
   (g) Turn OFF the power, and turn it ON again, and the XPRO-LEVEL adjustment value will become 254 and HV-ADJ adjustment value will become 50.

(4) Vertical position adjustment supplement
   The displayed adjustment data corresponding to the vertical position icon in OSM adjustment item differs at Normal and Factory mode.
   Normal mode ("UP / DOWN"):
      When this icon is moved, the trapezoid distortion compensation is automatically carried out.
      This is mainly used for compensating the distortion against the vertical position of the input timing image.
   Factory mode ("PF"):
      The trapezoid distortion compensation is not carried out automatically even if this icon is moved.
      This is mainly used for compensating the offset of the circuit and deflection yoke.

1.7.5 Power management

The function reduces the power consumption of the monitor when the connected computer is not used.
The function is turned ON and OFF from the adjustment picture.
The monitor has only one kind of the power management function.

(1) Conditions to enter power management mode
   a: "POWER SAVE" of the picture adjustment item is left ON.
   b: Neither HSYNC nor VSYNC are input.

(2) Power management operation
   When the power management is activated,
   (i) P_SUS signal is turned to LO to stop the power output on the secondary side except CRT heater, P-OFF+5V, +5V line.
   (ii) P-OFF signal is turned to HI to stop the power output of P-OFF+5V line.
   (iii) The front LED is lit orange.

(3) The time required to enter power management
   Normal mode : Approx. 8 seconds
   Factory mode : Approx. 2 seconds (to reduce the time required for confimation of power management operation at factory)

1.7.6 Display for aging

(1) How to display the picture for aging: Set factory mode, set IPM setting to DISABLE and disconnect sync. signal input to display the full-white picture as below.

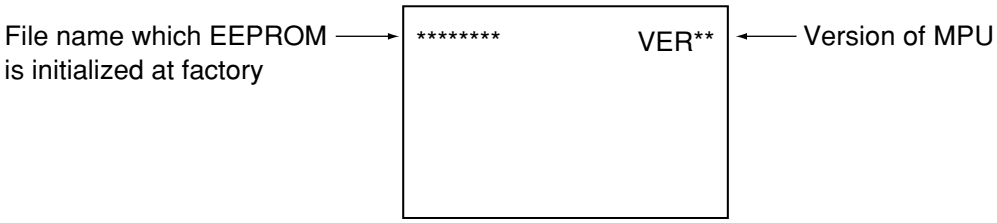

(2) Adjustment of horizontal width and vertical position of the picture for aging.
The following adjustments are feasible using front buttons with the picture for aging is displayed.

(a) (-) button : To narrow the horizontal picture width
(b) (+) button : To expand the horizontal picture width
(c) (↑) button : To move the picture up
(d) (↓) button : To move the picture down

1.7.7 LED display

Normally the LED is lit up green during screen display and orange during power management. However, when circuit operation error is detected, the system gets forcibly set to POWER MANAGEMENT mode, with the LED being lit up in the pattern given below.

High voltage adjusted value initialization procedures: Green 1 sec. → Orange 5 sec., repeat
High voltage protector: Green 1 sec. → Orange 1 sec. → Green 1 sec. → Orange 5 sec., repeat
EEPROM error: Green 1 sec. → Orange 1 sec. → Green 1 sec. → Orange 1 sec. → Green 1 sec. → Orange 1 sec. → Green 1 sec. → Orange 5 sec., repeat
BEAM protector: Green 1 sec. → Orange 1 sec. → Green 1 sec. → Orange 1 sec. → Green 1 sec. → Orange 1 sec. → Green 1 sec. → Orange 1 sec. → Green 1 sec. → Orange 1 sec. → Green 1 sec. → Orange 5 sec., repeat
Heater error: Green 1 sec. → Orange 1 sec. → Green 1 sec. → Orange 1 sec. → Green 1 sec. → Orange 1 sec. → Green 1 sec. → Orange 1 sec. → Green 1 sec. → Orange 1 sec. → Green 1 sec. → Orange 1 sec. → Green 1 sec. → Orange 5 sec., repeat
Power short-circuit on the secondary side: Green 1 sec. → Orange 1 sec. → Green 1 sec. → Orange 1 sec. → Green 1 sec. → Orange 1 sec. → Green 1 sec. → Orange 1 sec. → Green 1 sec. → Orange 1 sec. → Green 1 sec. → Orange 1 sec. → Green 1 sec. → Orange 1 sec. → Green 1 sec. → Orange 5 sec., repeat
I2C bus error: Green 1 sec. → Orange 1 sec. → Green 1 sec. → Orange 1 sec. → Green 1 sec. → Orange 1 sec. → Green 1 sec. → Orange 1 sec. → Green 1 sec. → Orange 1 sec. → Green 1 sec. → Orange 1 sec. → Green 1 sec. → Orange 1 sec. → Green 1 sec. → Orange 1 sec. → Green 1 sec. → Orange 5 sec., repeat

* EEPROM memory error: Each of the high voltage adjustment "HV-ADJ" and "XPRO-LEVEL" has independent backup data. As the power is turned ON, each adjusted value is read from EEPROM, and in case this value fails to correspond with the backup data, the situation is regarded as EPPROM memory error, setting the system forcibly to POWER MANAGEMENT mode.

1.7.8 Status memory to EEPROM

The following contents are stored in EEPROM in order to supplement the analysis of fault and claim causes.

(1) Operating time

Time excluding POWER SAVE:

This is the time indicated by HOURS RUNNING in OSM.

When the main power is cut in 15 min. or less after count up starts, the fraction is eliminated.

Time is allotted as the table below, and when it mounts to 32,767 hours 45 minutes, count up stops.

Time including POWER SAVE:

Total time with the power switch ON is memorized in EEPROM by 30 min. 2 bytes in size.

When the main power is cut in 30 min. or less after count up starts, the fraction is eliminated.

Time is allotted as the table below, and when it mounts to 32,767 hours 30 minutes, count up stops.

Table 9

EEPROM address	Contents
0 x 0C9	Lower byte of operating time (excluding POWER SAVE) (Part of min. Up to 16,383 hours 45 minutes is effective.)
0 x 0CA	Upper byte of operating time (excluding POWER SAVE) (Part of min. From 16,384 hours is effective.)
0 x 0CB	Lower byte of operating time (excluding POWER SAVE) (Part of time)
0 x 0CC	Upper byte of operating time (excluding POWER SAVE) (Part of time)
0 x 0CD	Lower byte of operating time (including POWER SAVE) (by 15 min.)
0 x 0CE	Upper byte of operating time (including POWER SAVE) (by 15 min.)

(2) Operating frequency memory

The input frequency for the past 3 times is memorized in EEPROM in 2*3 byte size.

In case the input frequency exceeds 3 times, the oldest memory value is discarded.

Table 10

EEPROM address	Content
0 x 75B	Preceding input horizontal frequency (unit: kHz)
0 x 75C	Preceding input vertical frequency (unit: Hz)
0 x 75D	Input horizontal frequency two step before (unit: kHz)
0 x 75E	Input vertical frequency two step before (unit: Hz)
0 x 75F	Input horizontal frequency three steps before (unit: kHz)
0 x 760	Input vertical frequency three steps before (unit: Hz)

(3) Protector operation rate memory

The protector operation rate due to error in high voltage, power short-circuit on the secondary side, I2C, BEAM, heater, or EEPROM is memorized in EEPROM in 24 bit (3 byte) size. The data is memorized in EEPROM per FACTORY ADJUSTMENT and USER mode (total 6 byte).

The count UP stops when each protector operation rate reaches the 15 times.

Table 11

EEPROM address	Content
0 x 761	Upper 4 bit: High-voltage error rate at User mode, Lower 4 bit: Short circuit rate at User mode
0 x 762	Upper 4 bit: I2C bus error rate at User mode, Lower 4 bit: Beam error rate at User mode
0 x 763	Upper 4 bit: Heater error rate at User mode, Lower 4 bit: EEPROM error rate at User mode
0 x 764	Upper 4 bit: High-voltage error rate at Factory mode, Lower 4 bit: Short circuit rate at Factory mode
0 x 765	Upper 4 bit: I2C bus error rate at Factory mode, Lower 4 bit: Beam error rate at Factory mode
0 x 766	Upper 4 bit: Heater error rate at Factory mode, Lower 4 bit: EEPROM error rate at Factory mode

1.8 Deflection processor block

1.8.1 Outline

The deflection processor block mainly composed of deflection processor IC generates and controls a variety of the following compensation waveform that are produced by this IC.
The deflection processor IC is a 64pins IC of uPD61882 of IC601.
The following seven points are generated and controlled by the deflection processor IC.
(Refer to the block diagram of IC601 in the figure 21.)

(1)Vertical deflection waveform generating circuit
(2)Horizontal deflection drive waveform generating circuit
(3)Distortion compensation waveform generating circuit
(4)DBF compensation waveform generating circuit
(5)Convergence compensation waveform generating circuit
(6)Blanking waveform generating circuit
(7)Moire canceling circuit

Moreover, the block is provided with a small both-face board (PWB-DEFL-SUB) of 60mm X 70mm.
The power of the deflection processor block is +3.3V that is converted from P-OFF+5V by the regulator of IC602, and the power and GND are divided into the digital system and analog system in the inner circuit of IC601 in order to prevent noise interference for the waveforms.
OP amplifier of IC603 uses the power of +5V and -15V, and works as the trace filter and voltage amplification of the amplitude of the saw-toothed waveform for vertical deflection.

1.8.2 Vertical deflection waveform generating circuit

The deflection processor IC (IC601) does 10-bit DAC output of the saw-toothed wave for vertical deflection that is synchronized with the vertical frequency input to pin 42, from pin 1 and pin 11 at both polarities (approx. 1.2V.p-p). Moreover, the center voltage IMID (approx. 1.6VDC) of the saw-toothed wave is output from pin 2.
To remove the noise, the OP amplifier (pins 1, 2 and 3) of the front step of IC603 removes the difference between the waveforms of both polarities of the saw-toothed wave for vertical deflection, using the center voltage IMID of the saw-toothed wave as the reference. From the output of the amplifier, the digital gradation component of the saw-toothed wave is removed with the low pass filter that is made of R642 and C628. Moreover, pin 62 and pin 63 of IC601 are the analog switch turning ON the retrace term, prevents the waveform deformation that is produced by the low pass filter, and prevents the degradation of the linearity and the fluctuation of the scanning line.
Moreover, the saw-toothed wave for vertical deflection is controlled to adjust the vertical picture width, vertical phase and linearity.
R645, R646, R647 and R649 connected to pair GND on the filter output composed of R642 and C628 are the resistor to improve the linearity of the saw-toothed wave for input vertical deflection, and switches the resistance into four steps with the transistor switch of Q603 and Q604 according to the vertical frequency. (Refer to Table 12.)
The saw-toothed wave for vertical deflection is output to the low output impedance with the OP amplifier (pins 5, 6 and 7) of the rear step of IC603.

Vertical frequency	Q604	Q603
50～72.9Hz	OFF	OFF
73～89.9Hz	ON	OFF
90～124.9Hz	OFF	ON
125～160Hz	ON	ON

Table 12 Vertical linearity compensation resistance select transistor ON/OFF

1.8.3 Horizontal deflection drive waveform generating circuit

The rectangular wave for horizontal deflection drive are output at the amplitude 3.3Vp-p and approx. 45% Duty from IC601 pin 25 with the delay of the transistor taken into account in order to make the Duty become 50% at the output of Q504 of the horizontal deflection circuit.
Here, the simulative horizontal sync. signal (5V pulse) from the horizontal flyback pulse (AFC, 5V pulse) input to IC601 pin 27 and IC103 (MPU) input to IC601 pin 44 is passed through the invertor of IC6A3 to produce the edges of these waveforms. This prevents the noises of the jitter , etc. from generating.
Moreover, the circuit composed of Q602, Q605 , etc. connected to IC601 pin 13 prevents the rapid frequency variation of the horizontal output when the horizontal input signal becomes no signal. IC601 pin 13 is a phase comparator filter terminal to phase-lock the horizontal input sync. signal and the oscillation in IC601. When the horizontal input sync. signal becomes no signal, the terminal voltage rapidly varies from approx. 0.8V of the phase lock time to 0V, and the frequency of the horizontal output rapidly varies according to this. The circuit is added to compress the rapid frequency variation width by smoothening the variation of the terminal voltage of pin 13 by C636 when it becomes unlocked. This prevents the horizontal collector pulse from jumping in order to prevent overvoltage against the horizontal output transistor (Q550).
The terminals pin 13 to pin 20 of IC601 become the control filter terminal of horizontal PLL.

1.8.4 Distortion compensation waveform generating circuit

The deflection distortion compensating waveform is output from pin 64 of IC601. The waveform is output from 1-bit DAC, and 3.3V pulse waveform of resolution power of 25MHz is output at pin64 direct. The pulse waveform is smoothened with the low pass filter of R632 and C622 to gain the compensation waveform of the vertical frequency. The amplitude is approximately 1.0 to 1.2Vp-p, and is connected to pin5 of IC5C0.
The horizontal size, trapezoid compensation, side pin compensation, upper/lower compensation of the side pin, S type compensation of the side pin and W compensation of the side pin are applied. (Refer to the compensation image, figure 22.)
The deflection compensation waveform in the horizontal phase system is output from pin 57 of IC601. Pin 57 is the 1-bit DAC output, and outputs the pulse waveform of 3.3V of resolution power of 25MHz. The pulse waveform is smoothened with the low pass filter of R614, R619, C601 and C604, and the waveform of the vertical frequency is current-added to the filter (pin 20 of IC700) of the horizontal system PLL to compensate for the deflection distortion of the horizontal phase system. The parallel rectangular distortion compensation and the side pin balance (upper and lower) compensation are executed. (Refer to the compensation image, figure 22.)

1.8.5 DBF compensation waveform generating circuit

The horizontal system DBF compensation waveform is output in 8-bit DAC mode from pin 10 of IC601. The amplitude is approximately 0.5Vp-p. It is connected to pin 5 of IC6A1.

The vertical system DBF compensation waveform is output from pin58 in the 1-bit DAC mode. Pin 58 direct outputs the pulse waveform of the resolution power of 25MHz. The pulse waveform is smoothened with the low pass filter of R621 and C607 to gain the DBF compensation waveform of the vertical frequency. The amplitude is approximately 0.6Vp-p. It is connected to pin 3 of IC6A1.

1.8.6 Convergence compensation waveform generating circuit

The horizontal dynamic convergence compensation waveform is output from pin 6 of IC601 in the 8-bit DAC mode. The amplitude is approximately 0V to 0.5V. The vertical dynamic convergence compensation waveform is output from pin 8 in the 10-bit DAC mode. The amplitude is approximately 0V to 0.5V. The dynamic convergence compensation waveform center voltage (approx. 1.6V) is output from pin 7.
In the 1-bit DAC mode, the horizontal static convergence compensation waveform is output from pin 61, and the vertical static convergence compensation waveform is output from pin 60. In pins 60 and 61 direct, the pulse waveform of the resolution power of 25MHz is output. The pulse waveform is smoothened through the low pass filter to gain the horizontal static convergence compensation waveform and vertical static convergence compensation waveform of the vertical frequency.

1.8.7 Blanking waveform generating circuit

The horizontal blanking pulse and vertical blanking pulse are generated in IC601, and these two waveforms are mixed and output at 3.3Vp-p from pin 40 of IC601.
The reference of the phase of the vertical blanking pulse is determined at the leading edge of VFLY (vertical flyback pulse, 5V pulse) of pin 39 input of IC601, and the phase can be variably controlled to output the optimal waveform of the blanking pulse.
The horizontal blanking pulse is a pulse that is synchronized with H-IN (horizontal sync. signal, 5V pulse) of pin 44 input of IC601, and can be also variably controlled.
The waveform is connected to pin 27 of the preamplifier (IC211) of the video board.

1.8.8 Moire canceling circuit

The moire canceling circuit outputs the waveform that is reversed every line of the horizontal frequency and every 1 frame of the vertical frequency from pin 22. The vertical frequency waveform is output from pin 23, and these two waveforms are added to the horizontal PLL through the filter of R630 and C618 to achieve the moire canceling function.

Pin 30 of IC601 is a terminal to detect the drop of the power voltage (+3.3V), and the detection voltage is approximately 1.0V. When a power voltage drop is detected, pin 32 of IC601 varies from Hi level (5V) to Lo level (0V) but is not used now.
Pin 46 is a terminal to detect whether the horizontal PLL is locked and HD output from pin 25 is normal or not. It is output at the Hi level (5V) when it is locked, and at the Lo level (0V) when it is unlocked. It is connected to IC103 (MPU).
Pin 49 is the reset terminal of IC601. The reset IC of IC6A4 resets IC601 when P-OFF+5V drops to approx. 2.7V.

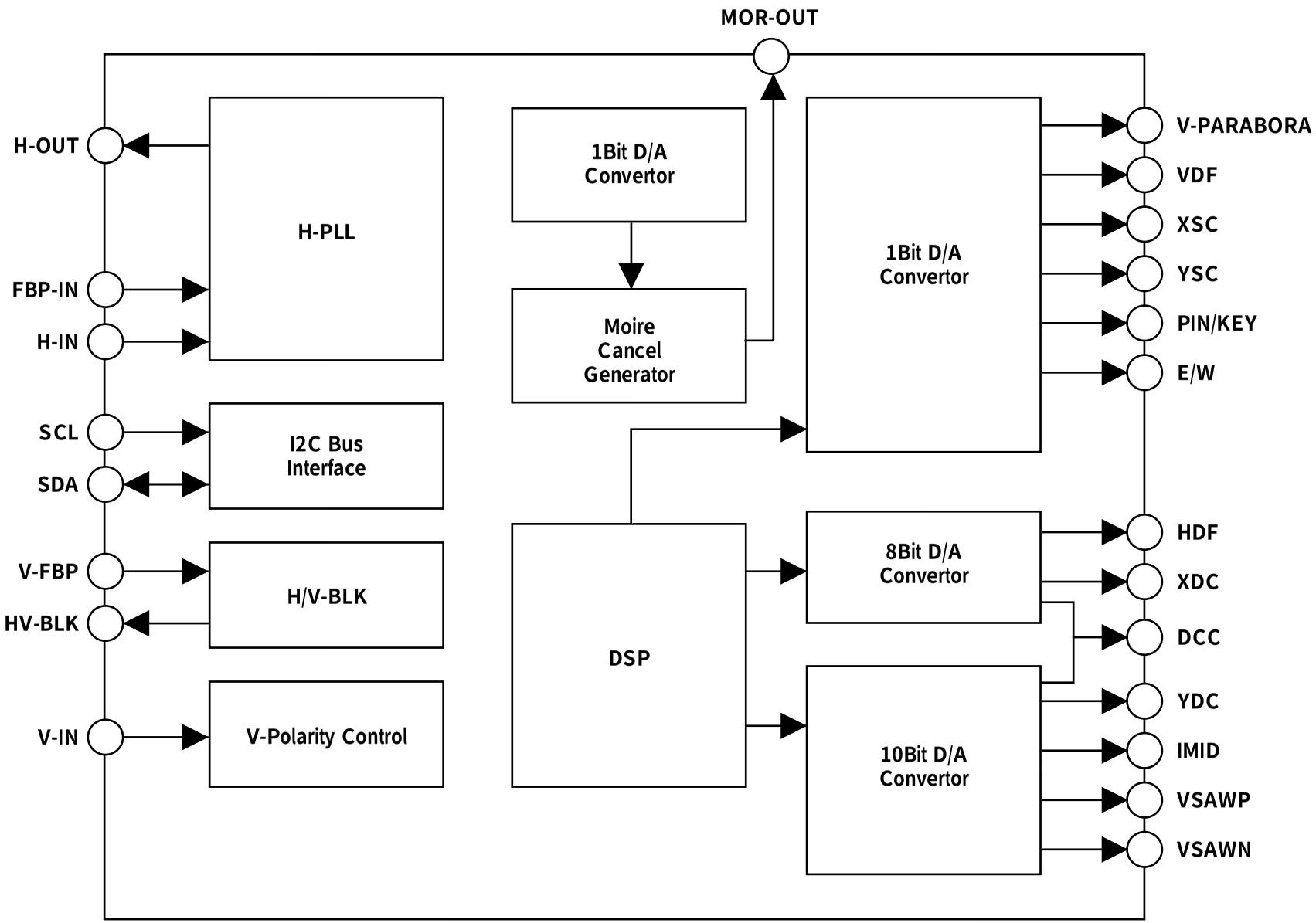

Figure 21 IC601 block diagram (uPD61882BGC)

1.8.9 Distortion compensating operation

The followings are the operation image figures on the picture of the distortion compensstion.

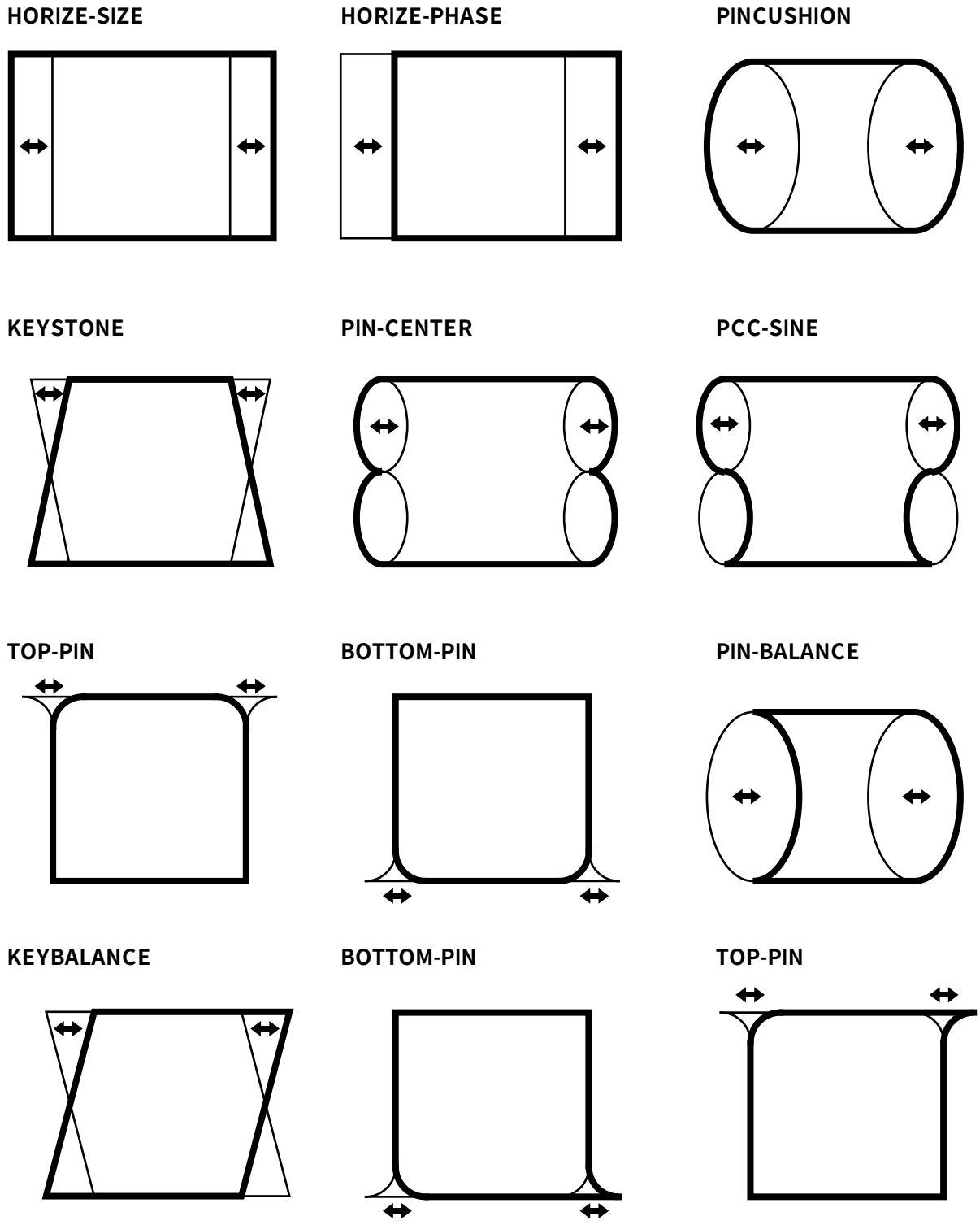

Figure. 22

1.9 Video Block

1.9.1 Picture signal amplifier circuit

The picture signal (video) amplifier is identical circuit configuration for R, G, and B. In this section, the G (green) video circuit will be described.

Note that the picture signal input of this machine is confined to one system of D-SUB connector.

The video signal is input from pin 2 of D-SUB connector J215 to pin 6 of Pre-AMP IC211. (Refer to point A in Fig.23.)

The video signal is subjected to voltage amplification, composition and amplitude control [Description 1] in Pre-AMP IC211 and output from pin 32. (Refer to point B in Fig.23.)

The video signal, output from Pre-AMP, is input into pin8 of MAIN-AMP IC210 to undergo final amplification, then output from pin 5 of MAIN-AMP IC210. (Refer to point C in Fig.23.)

* The MAIN-AMP IC210 is an amplifier used for voltage amplification (GAIN: 12 to 15 times) of the video signal.

The video signal undergoes AC coupling with the cut-off circuit (Refer to Picture Signal Amplifier and Cut-off circuit diagram in Fig.23), input into CRT socket J200 through the connector J202 on CRT substrate from the connector J210, and is then supplied to the cathode of CRT. (Refer to point D in Fig.23)

[Description 1] Role of Pre-AMP (IC211)

- Voltage amplification of video signal (GAIN: 0 to 5 times)
- Composition of the video signal for Adjustment screen (OSM) output from IC212 and the blanking signal output from IC601.
- Amplitude control of the output voltage (ABL control) <Note 1>
- D/A output for bias control

The above items are all controlled by I2C bus (IC211 pin 21: SDA_I2C, pin 20: SCL_I2C) from the microcomputer IC103.

<Note 1> ABL: Anode Beam Limiter

With the CRT anode current controlled through the current detection of the flyback transformer on the MAIN substrate, the limiter sets the upper limit of brightness at the time of full white screen.

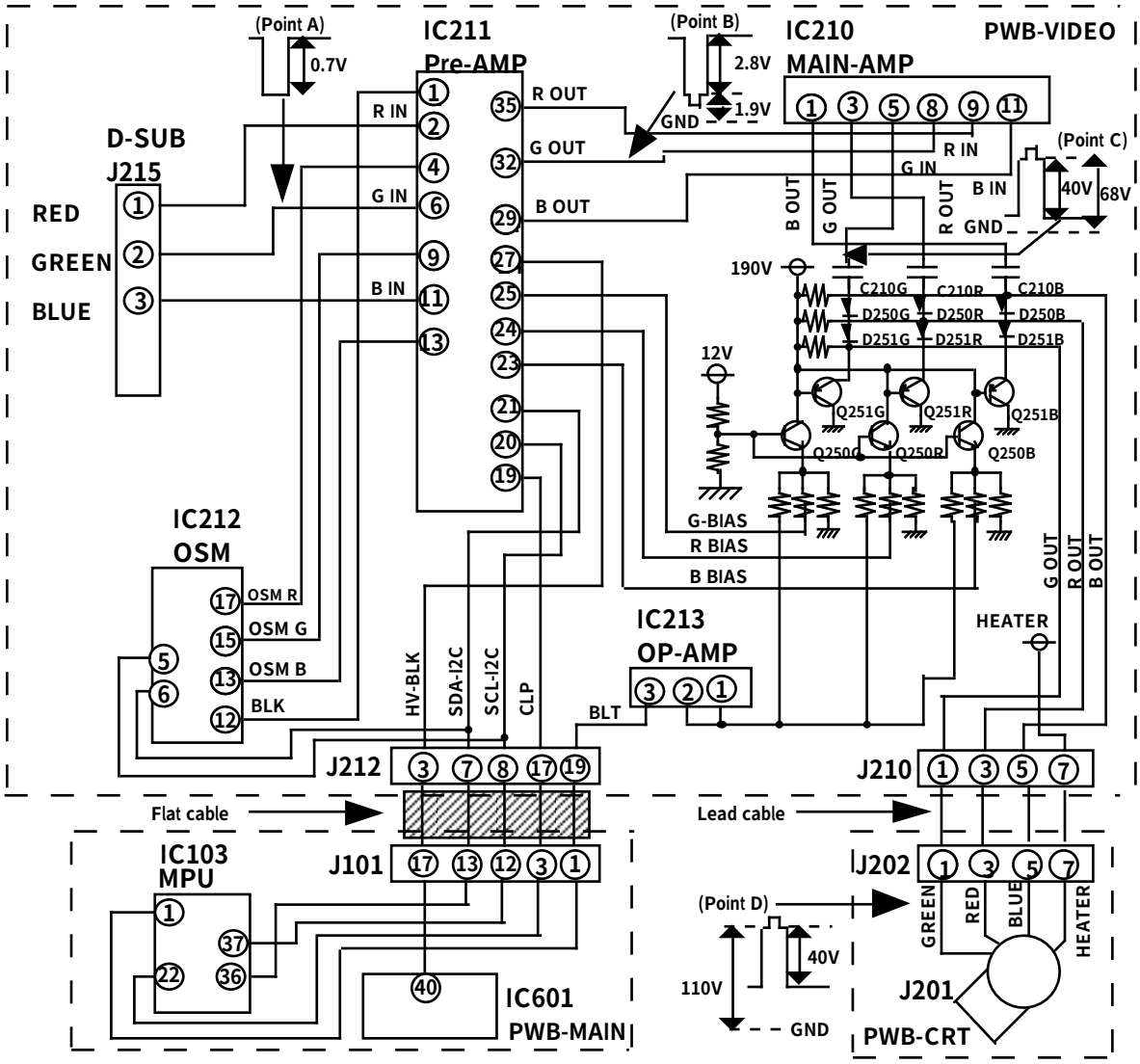

Figure 23 Video signal amplification circuit diagram

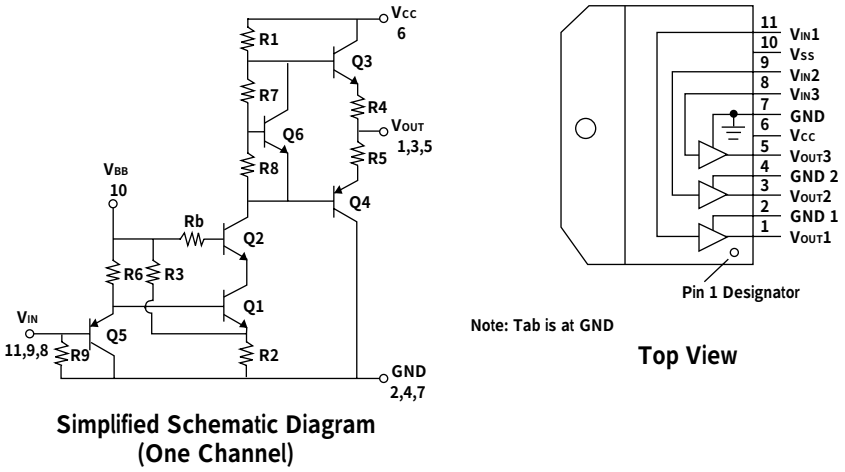

Figure 24 IC210 (LM2415T) block diagram

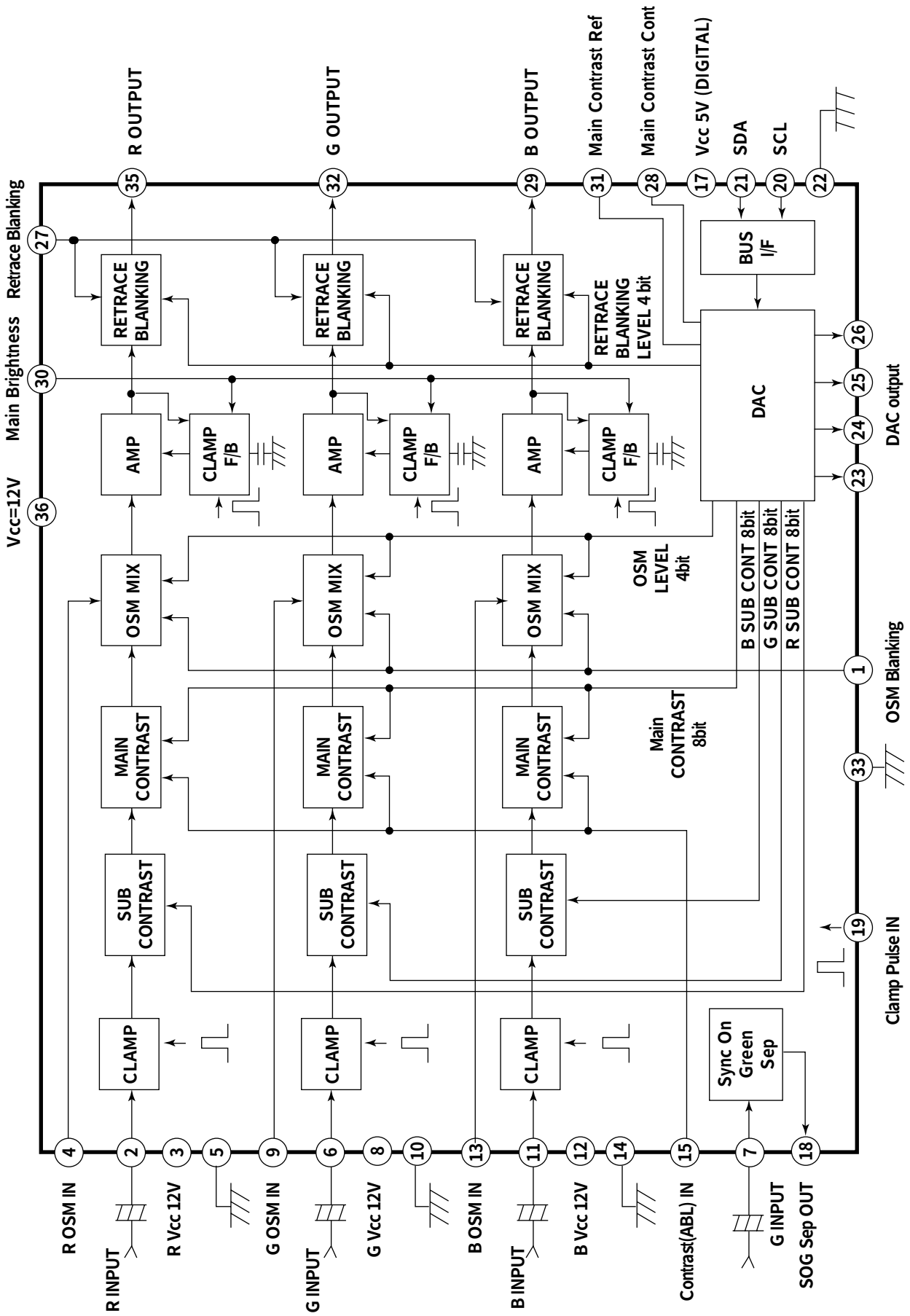

Figure 25 IC211 (M52743 BSP) block diagram

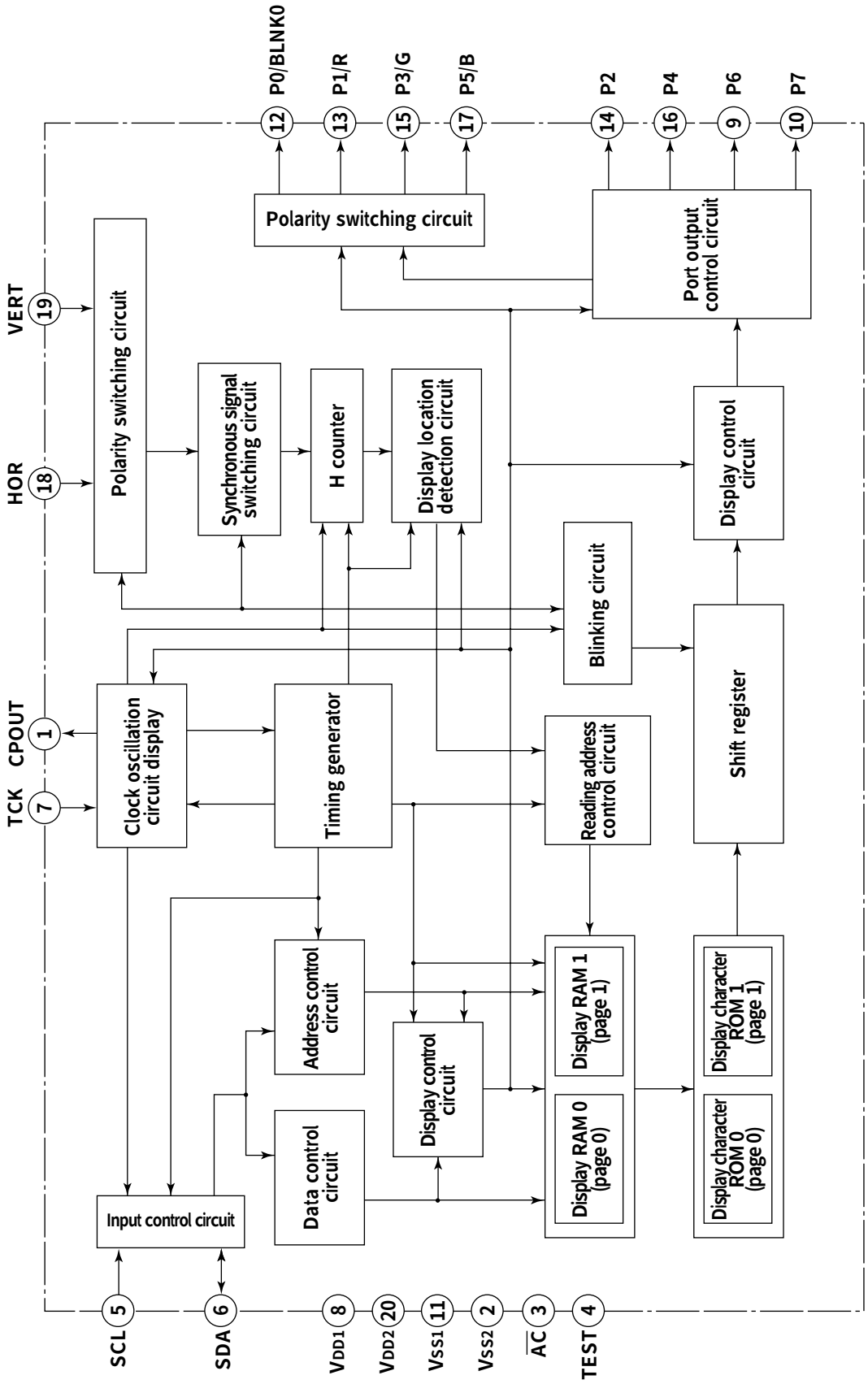

Figure 26 IC212 (M35071-067SP) block diagram

1.9.2 Cut-off circuit

The video signal with its voltage amplified in picture signal amplifier circuit is then subjected to AC coupling (with the pulse superposed on DC voltage) with the cut-off (diode clamp) circuit (DC bias control circuit) composed of D250G, D251D, Q250G and Q251G by C210G.

The cut-off (DC bias control) circuit varies the back raster luminance (BRIGHTNESS) and chromaticity (BIAS) using brightness control signal and bias control signal. The brightness control signal varies the back raster luminance (BRIGHTNESS) by applying BRT signal output from pin1 of the microcomputer IC103 to the emitter of the base grounded transistor Q250G. The bias control signal is output from pin 25 of Pre-AMP IC211. Similar to the brightness control signal, the bias control signal is also applied to the emitter of the base grounded transistor Q250G to vary the back raster chromaticity (BIAS).

1.9.3 Sync signal circuit

1.9.3.1 Separate synchronous signal

The horizontal synchronous signal is input into pin 13 of inverter IC218 from pin 13 of D-SUB connector J215, while the vertical synchronous signal from pin 14 of D-SUB connector J215 is input into pin 1 of inverter IC218. (Refer to point A in Fig.27)

The horizontal/Vertical synchronous signals are input again into inverter IC218 to output the horizontal synchronous signal from pin 10 and the vertical synchronous signal from pin 4. (Refer to point B in Fig.27)

The role of inverter IC218 is to eliminate the jitter (a kind of noise) from the screen displayed on the monitor.

The horizontal and vertical synchronous signals output from inverter IC218 are supplied simultaneously to pin 30 (horizontal) and pin 20 (vertical) of the microcomputer IC103 on MAIN substrate.

The separate synchronous signal has positive polarity (POS) and negative polarity (NEG), with the Fig-27 indicating the case when the signal of positive polarity (POS) is input.

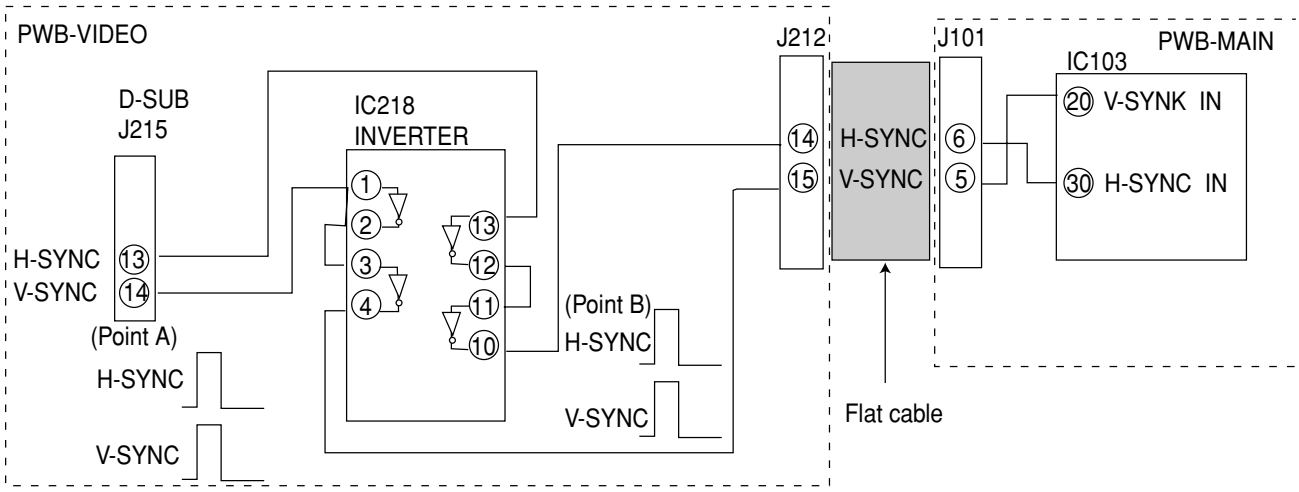

Figure 27

1.9.3.2 Composite sync signal

Similar to the horizontal synchronous signal in the aforesaid item [Separate synchronous signal], the composite synchronous signal is input from pin 13 of D-SUB connector J215 and input into pin 30 of the microcomputer IC103 on MAIN substrate.
The horizontal/vertical synchronous separation of the composite synchronous signal is carried out in microcomputer IC103.

1.9.4 On Screen Manager circuit

The control signal of adjustment screen (OSM) is input into pin 5 (CLK), pin 6 (DATA), pin 18 (H-BLK) and pin 19 (V-BLK) of IC212. The IC215 outputs pin 12 (BLK), pin 13 (OSM-B), pin 15 (OSM-G) and pin 17 (OSM-R) and is combined with the video signal in IC211.

1.10 Wave form of main circuit voltage

Please refer to clause 3 schematic diagram (The numbers under every picture are described on schematic diagram).

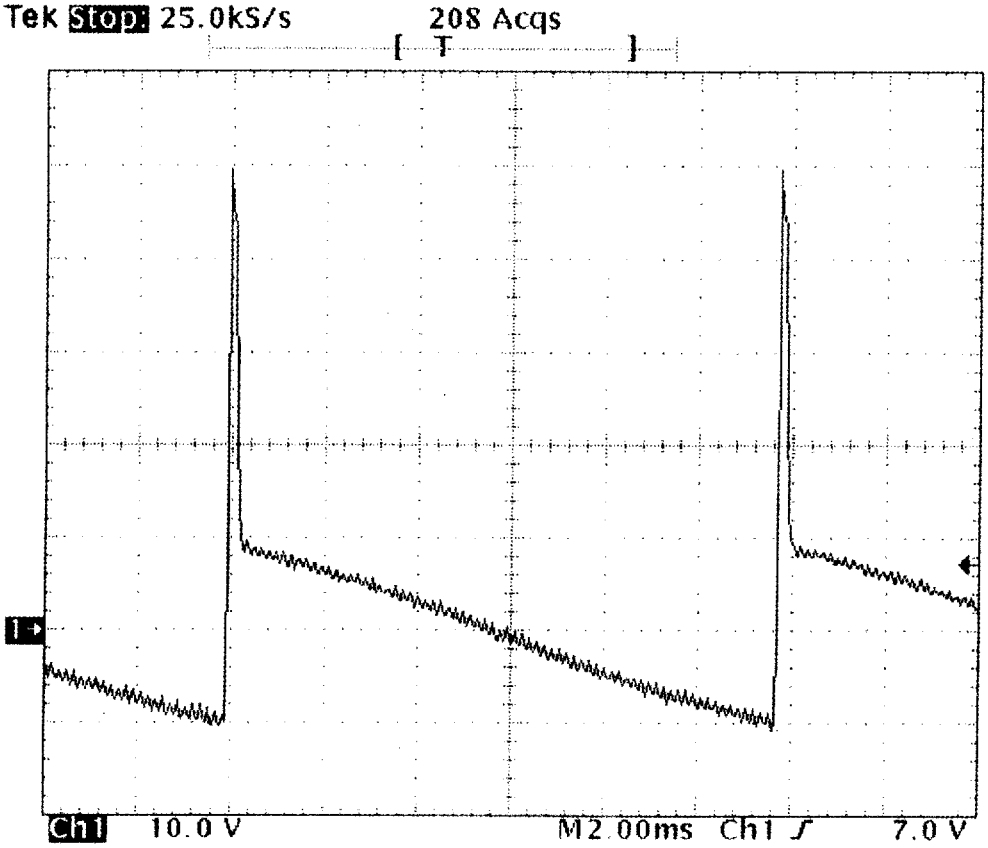

① fig. 401

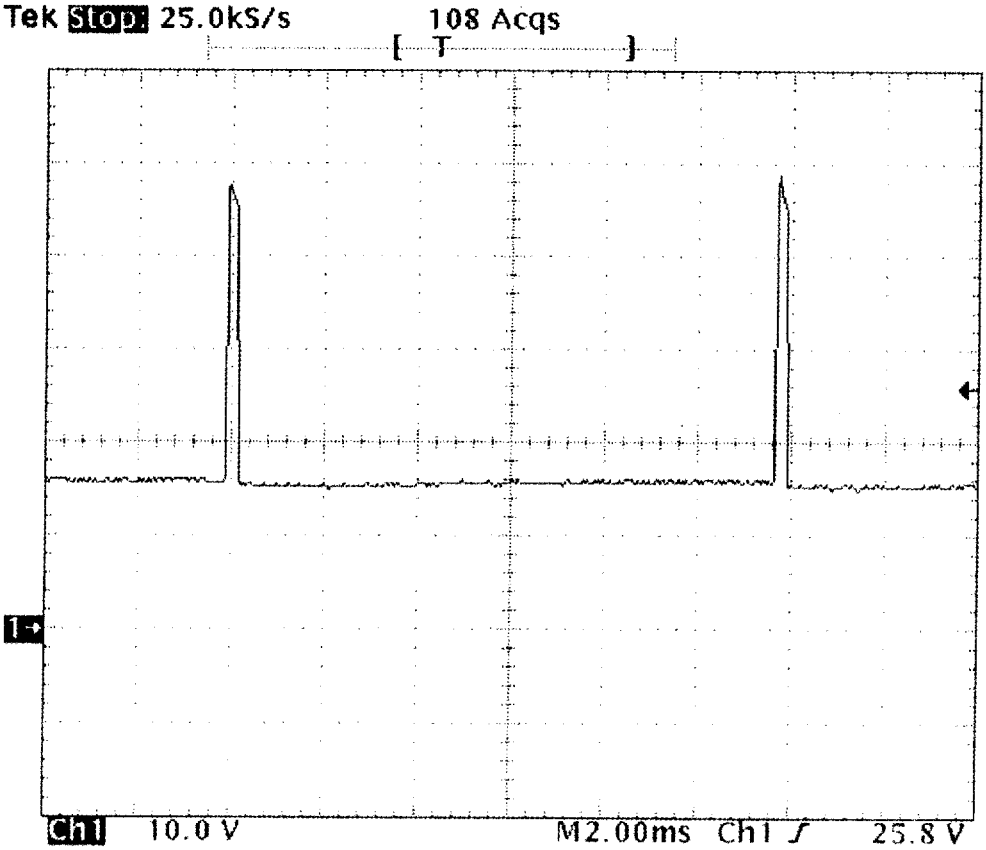

② fig. 402

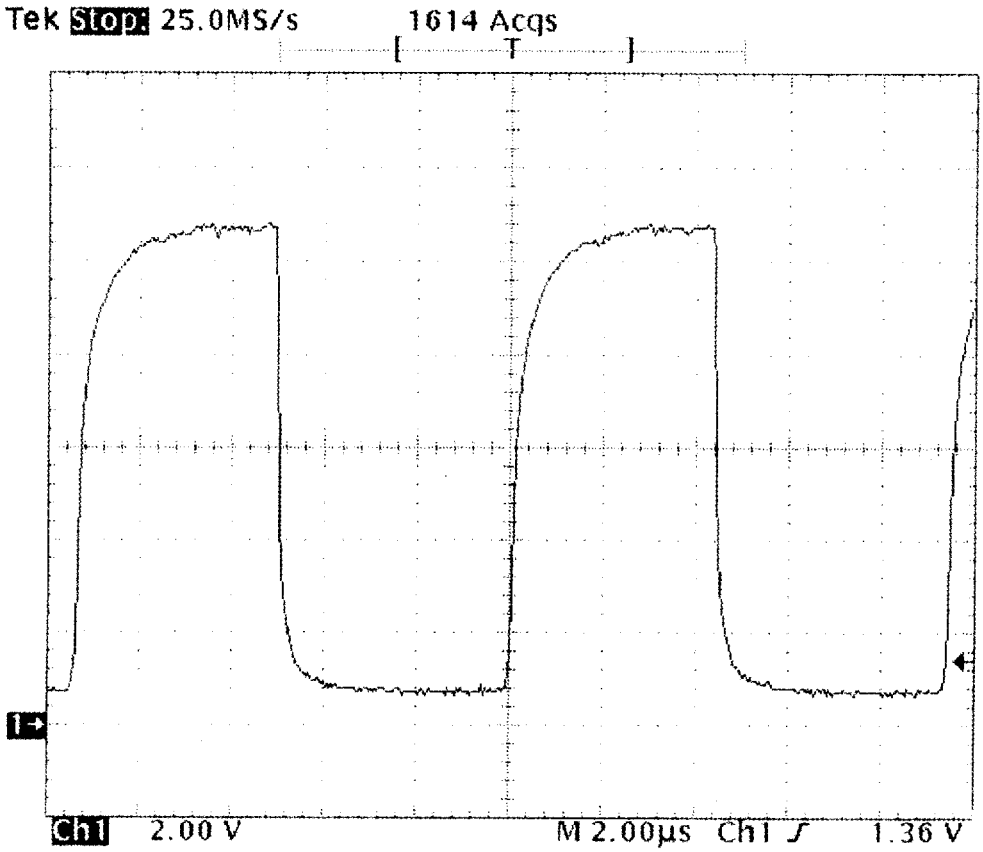

③ fig. 501

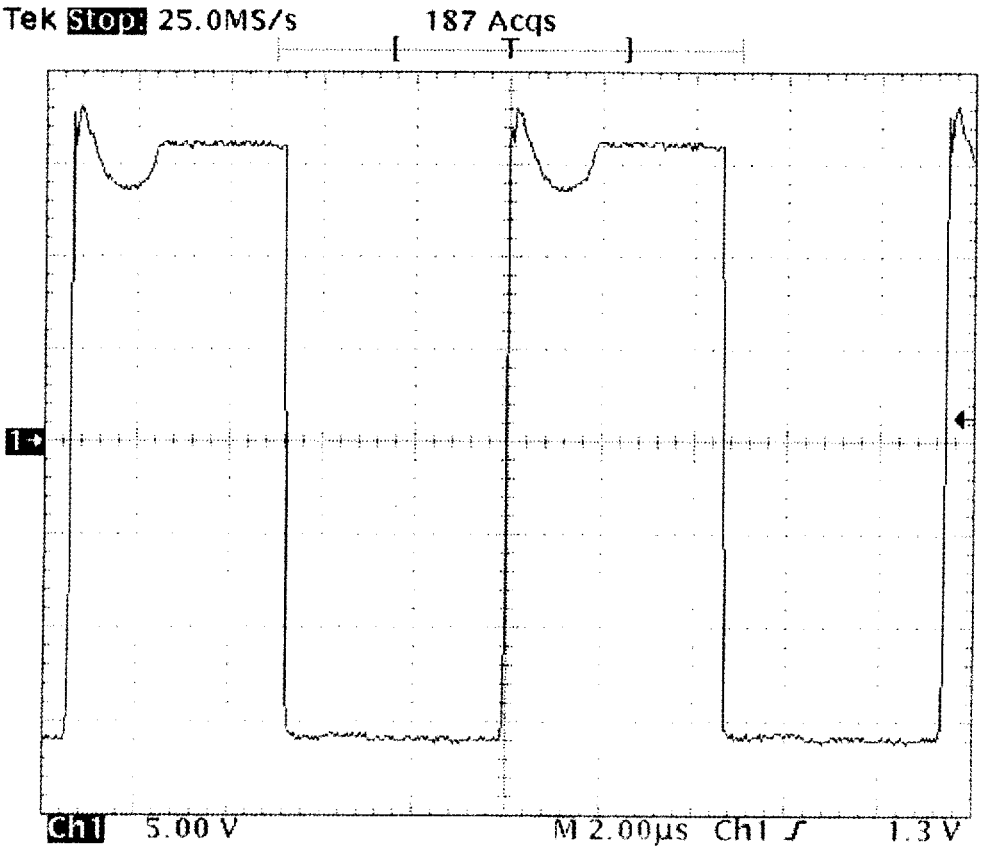

④ fig. 502

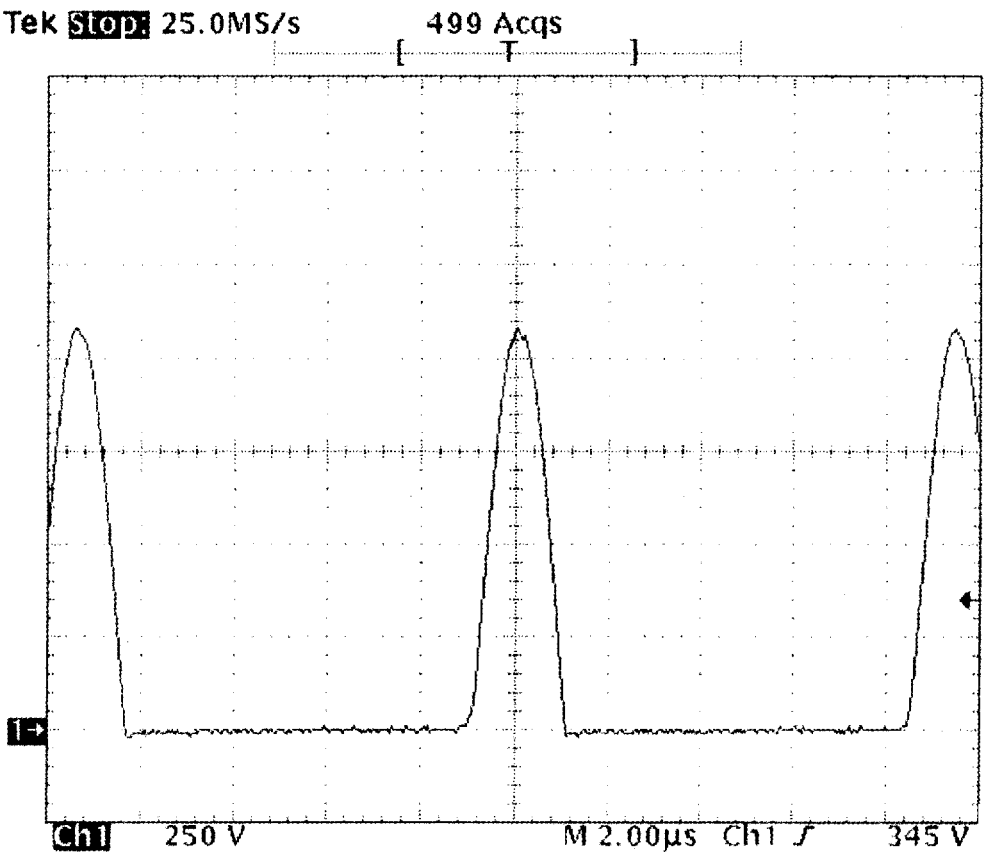

⑤ fig. 503

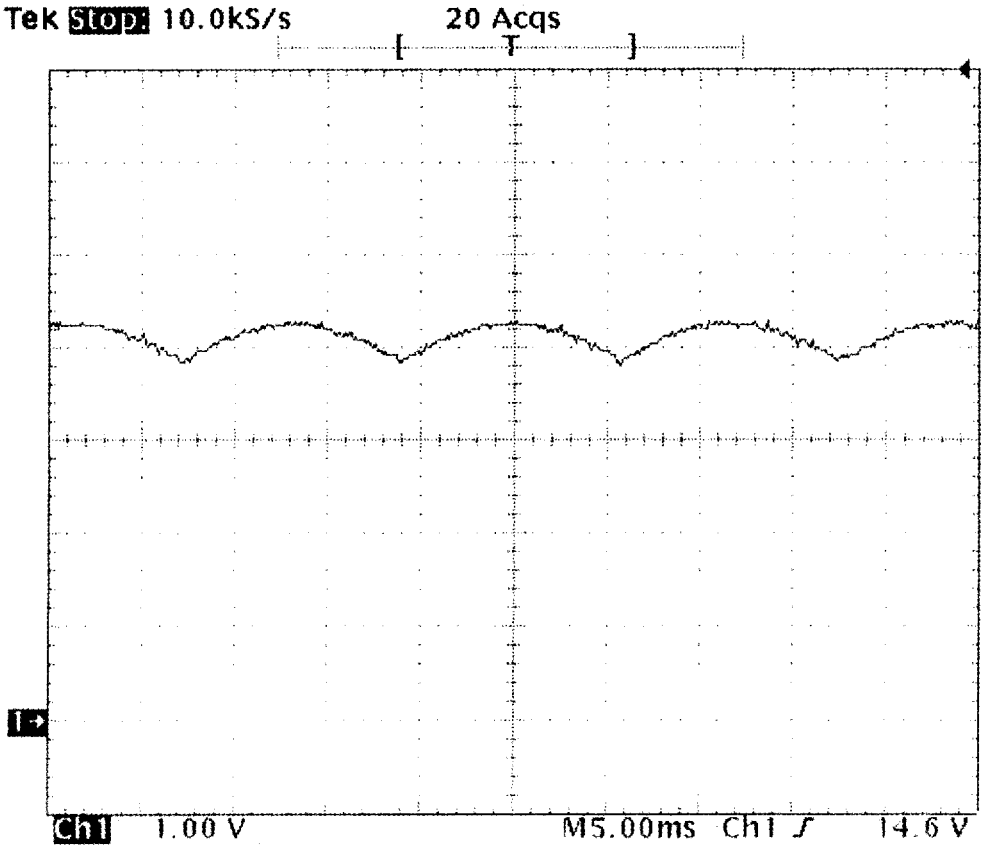

⑥ fig. 504

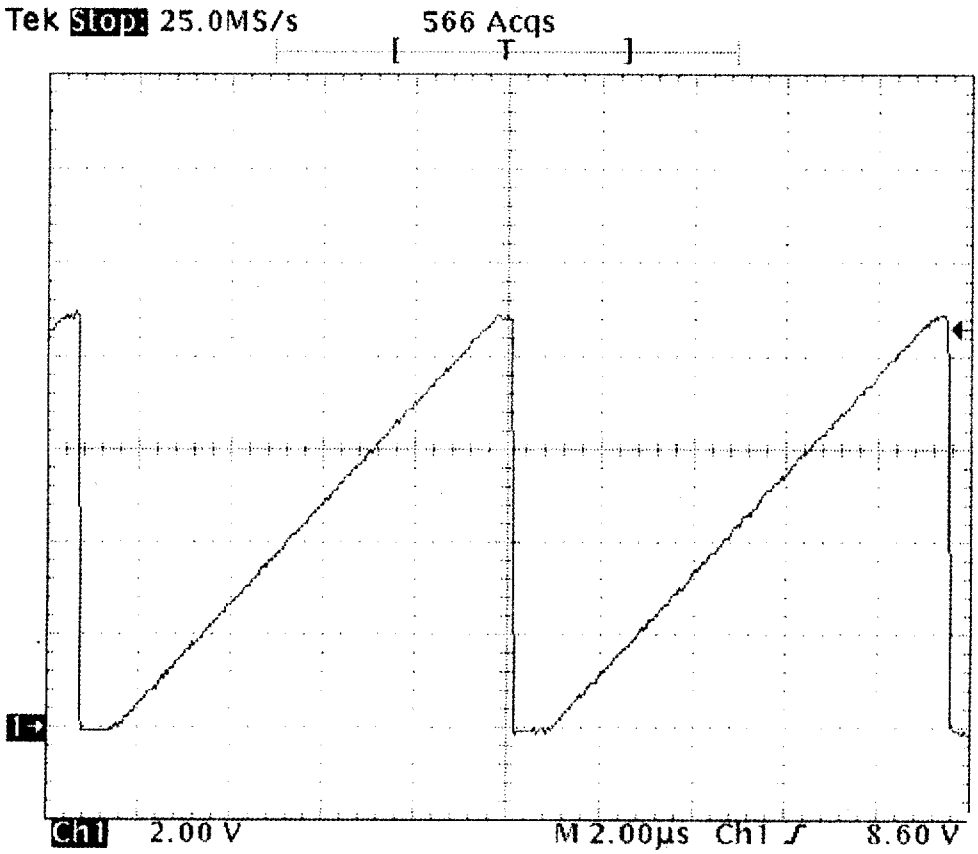

⑦ fig. 505

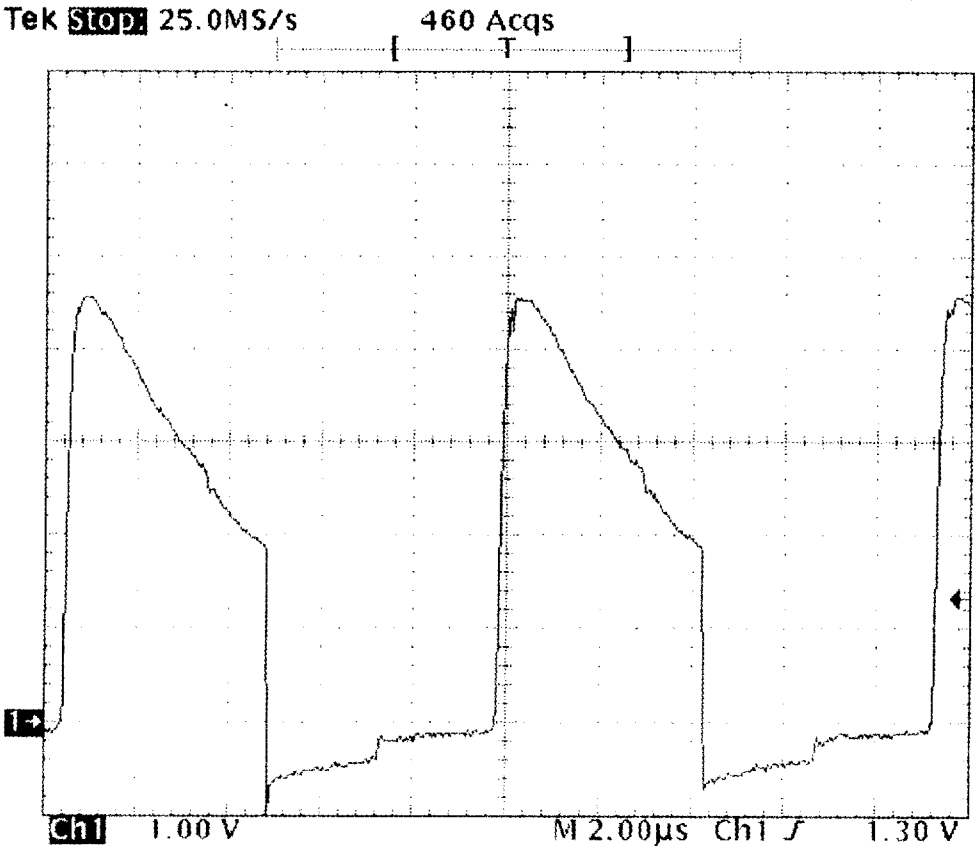

⑧ fig. 506

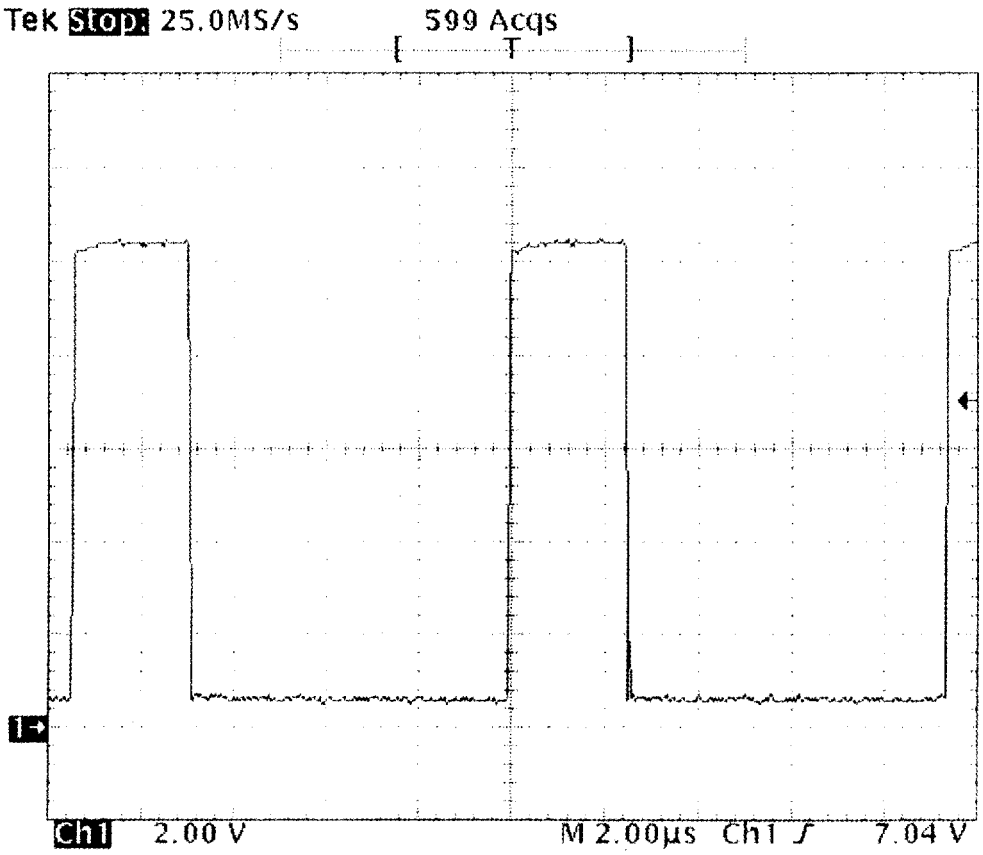

⑨ fig. 507

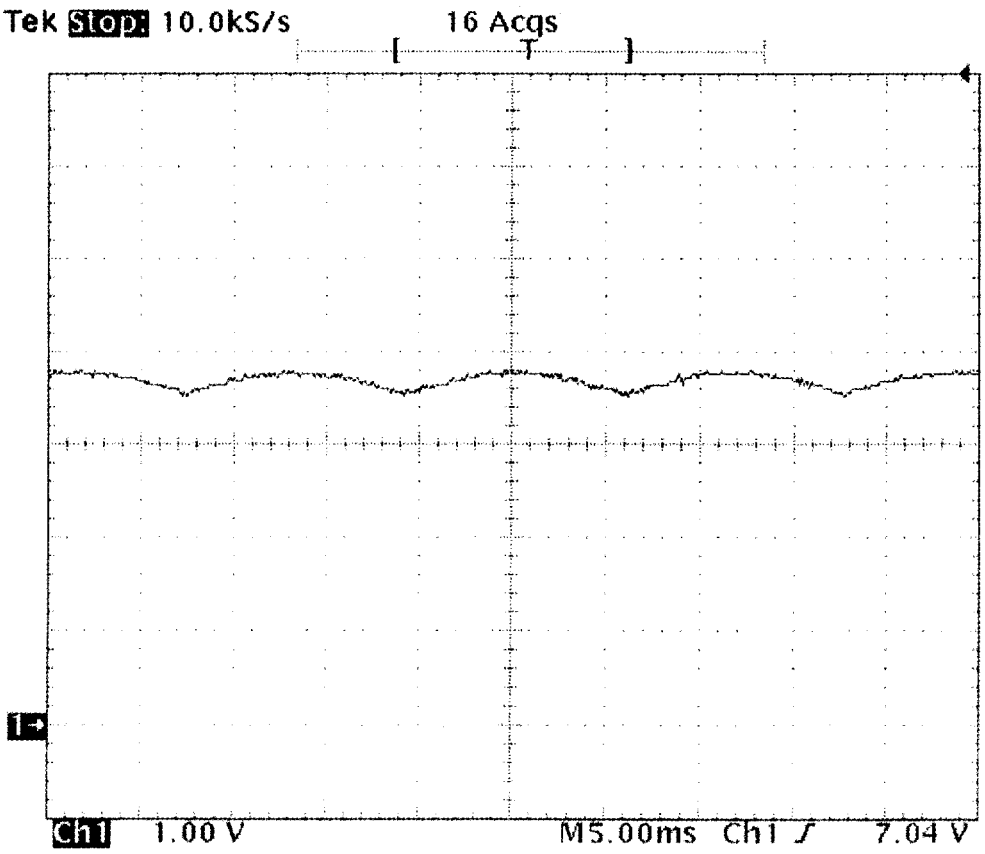

⑩ fig. 508

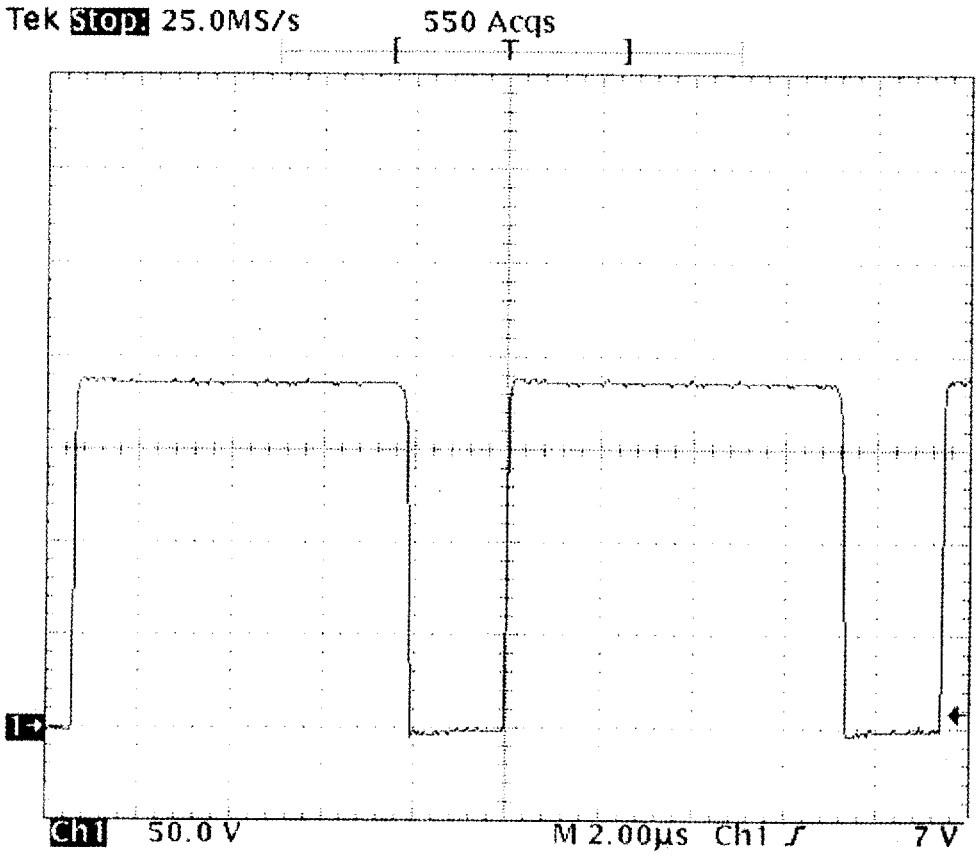

⑪ fig. 509

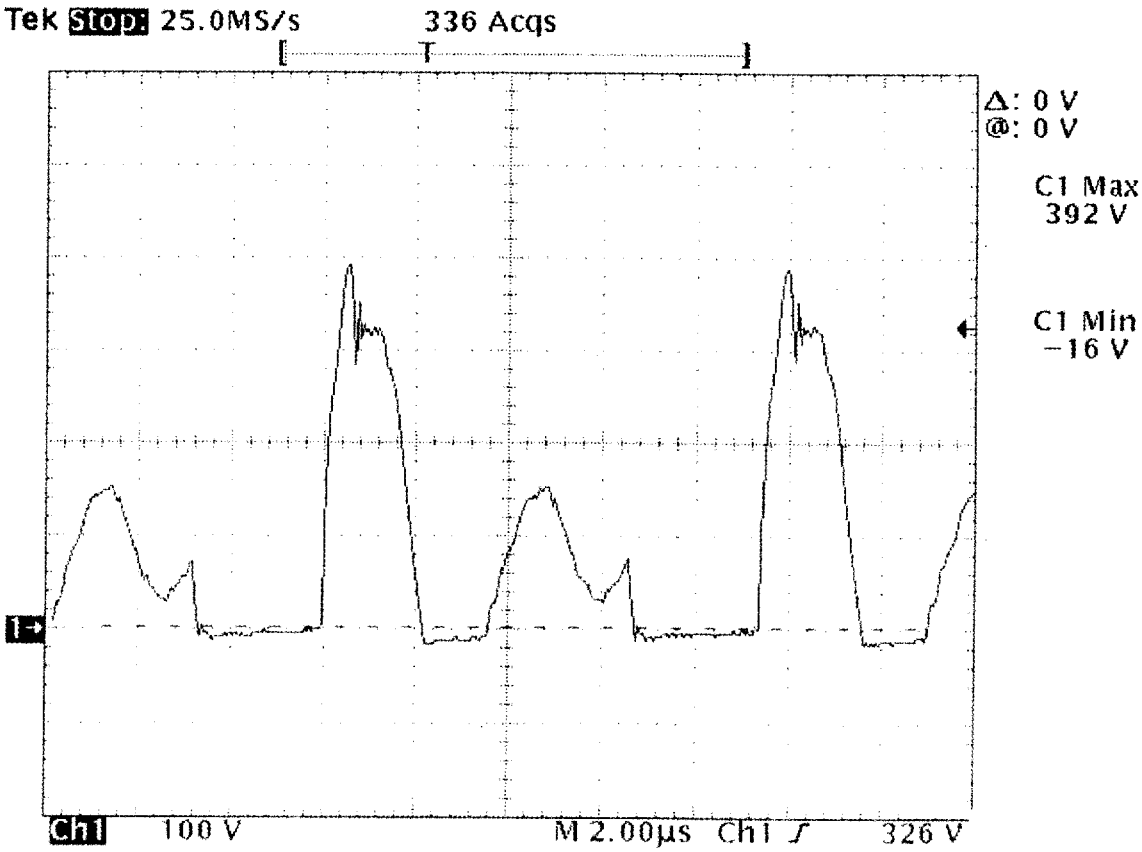

⑫ FBT 1 pin

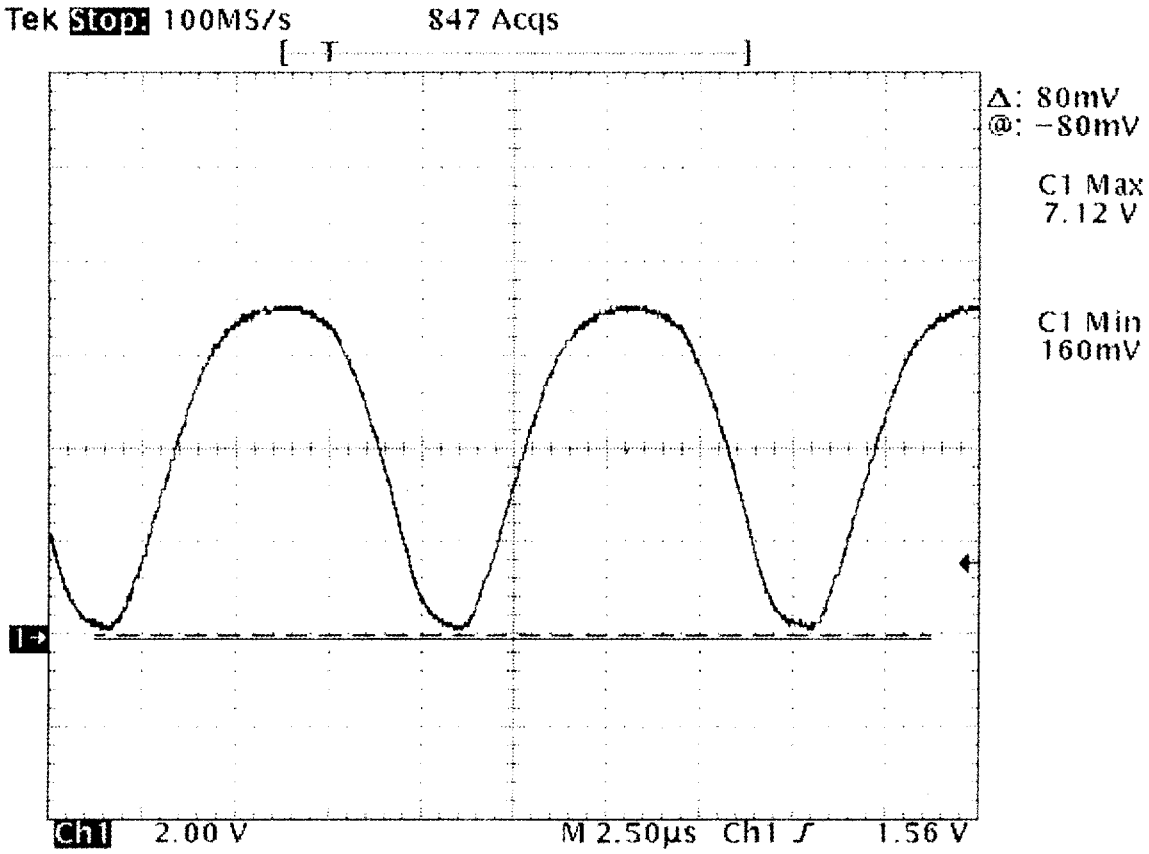

⑬ HDF-IN

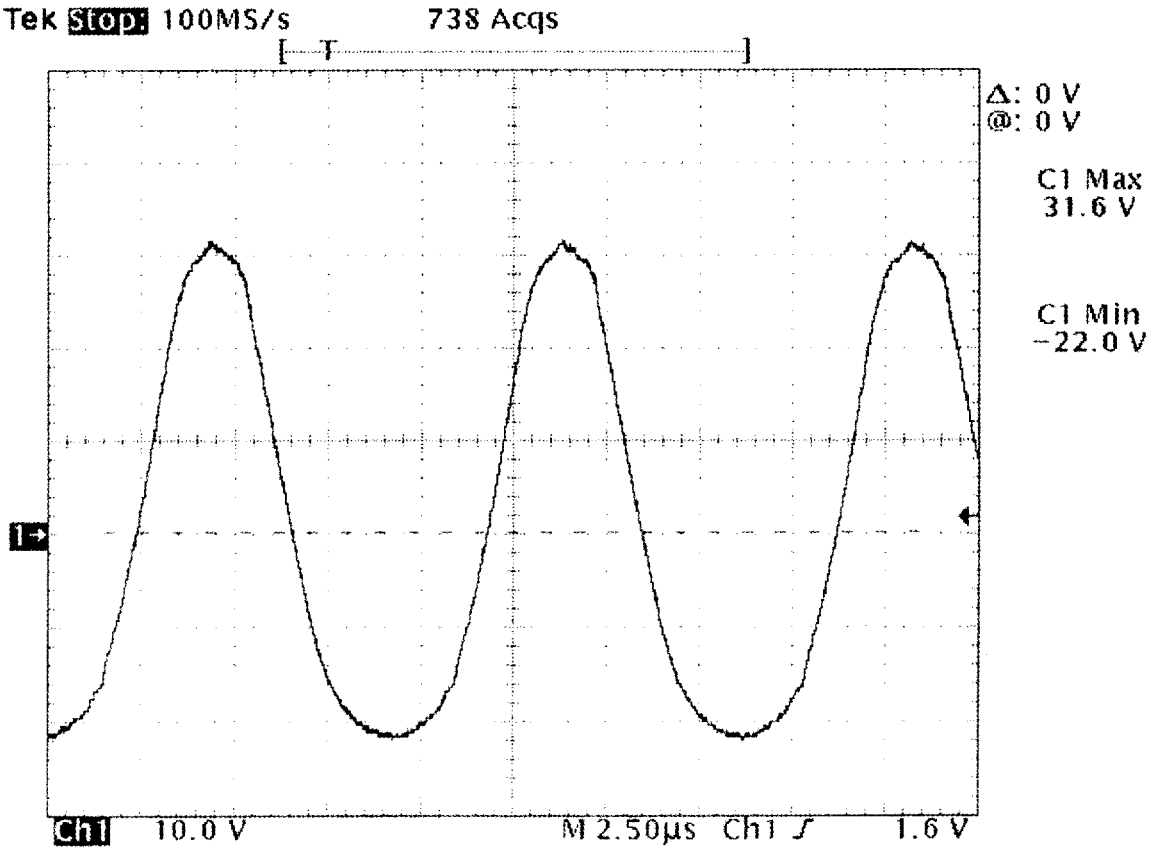

⑭ HDF-OUT

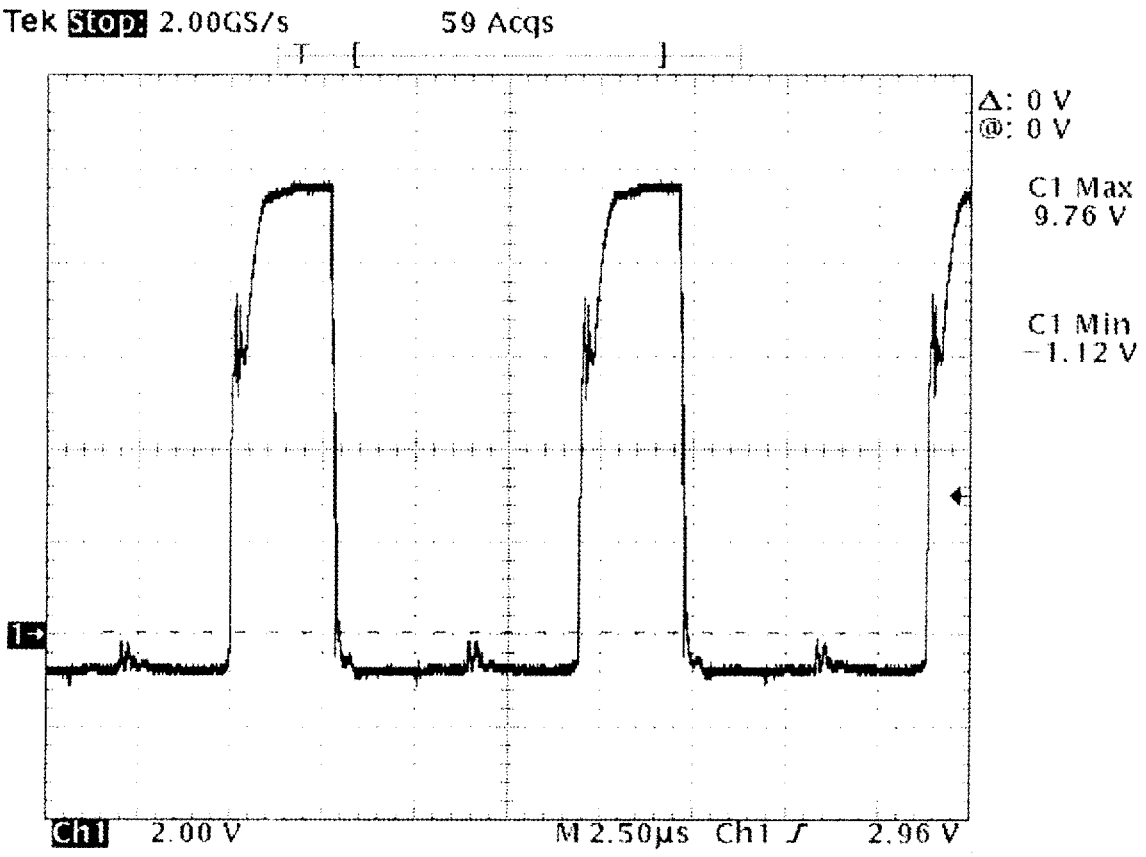

⑮ HV-OUT

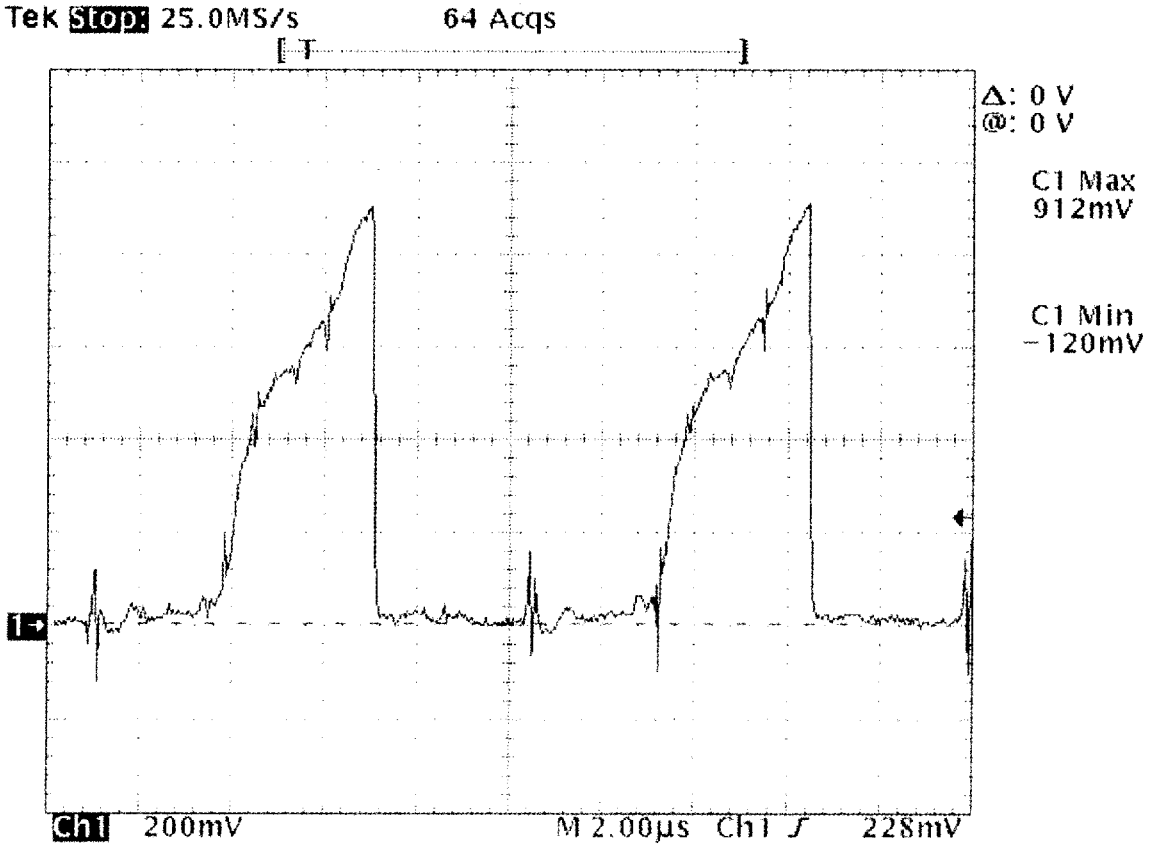

⑯ IC701 4 pin

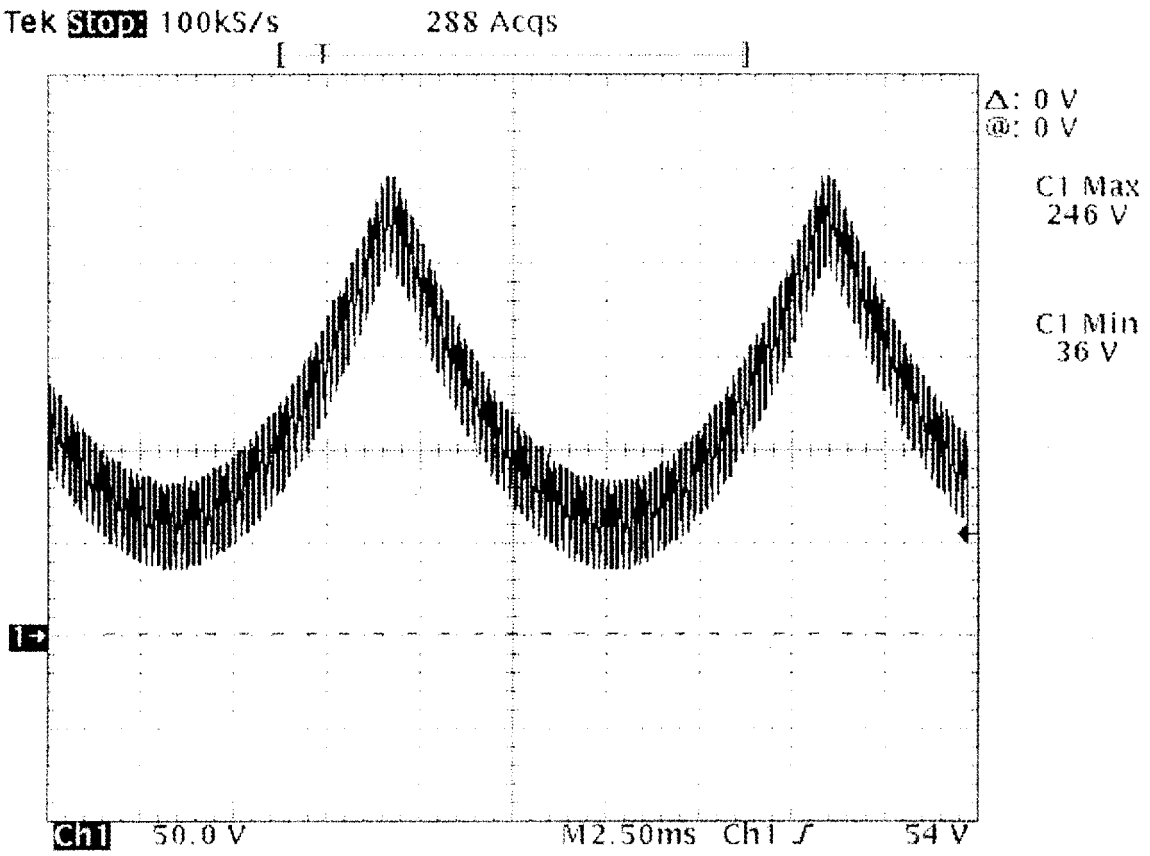

⑰ VDF (C)

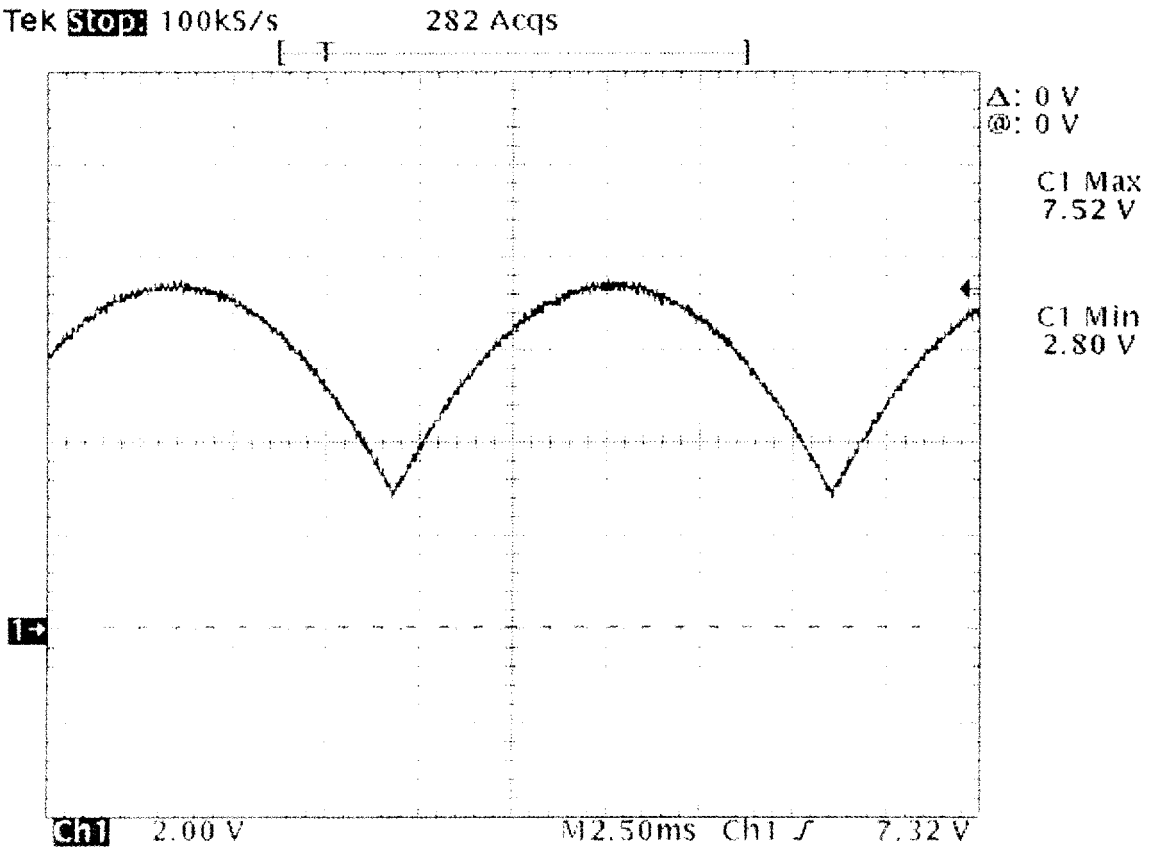

⑱ VDF-IN (B)

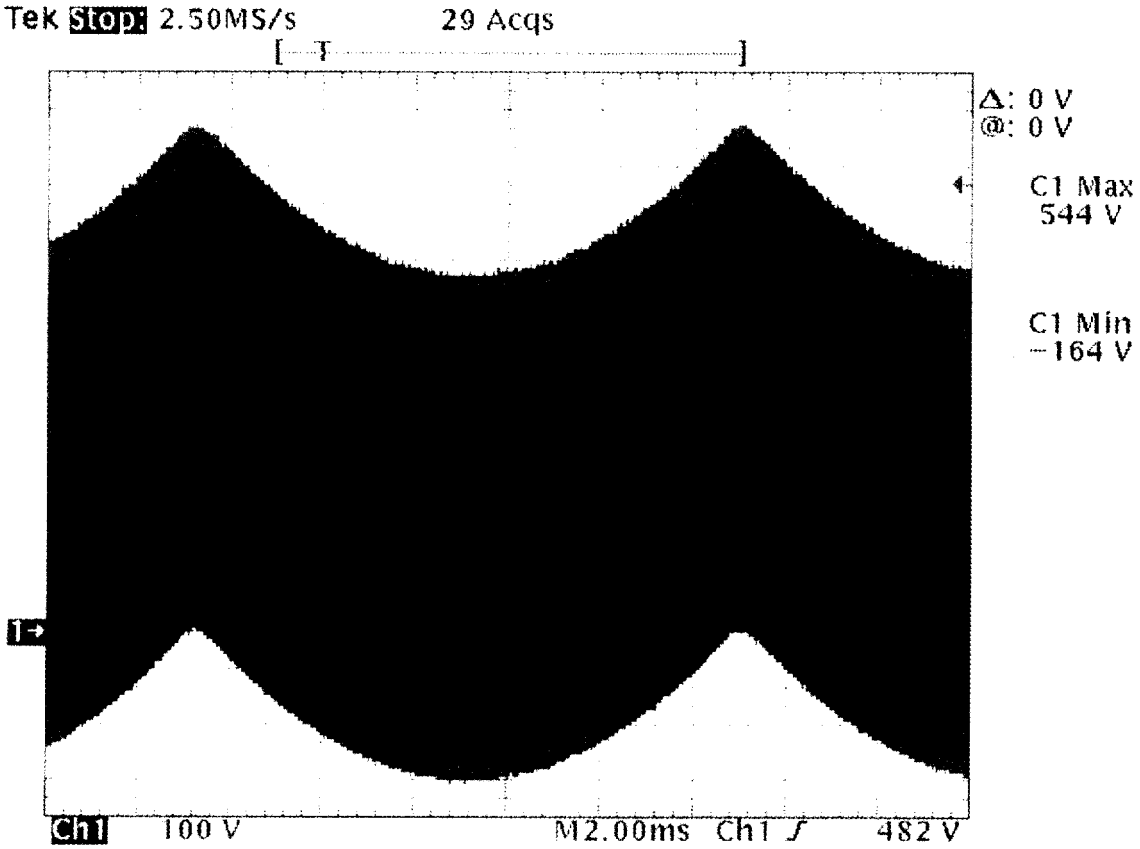

⑲ VDF-OUT

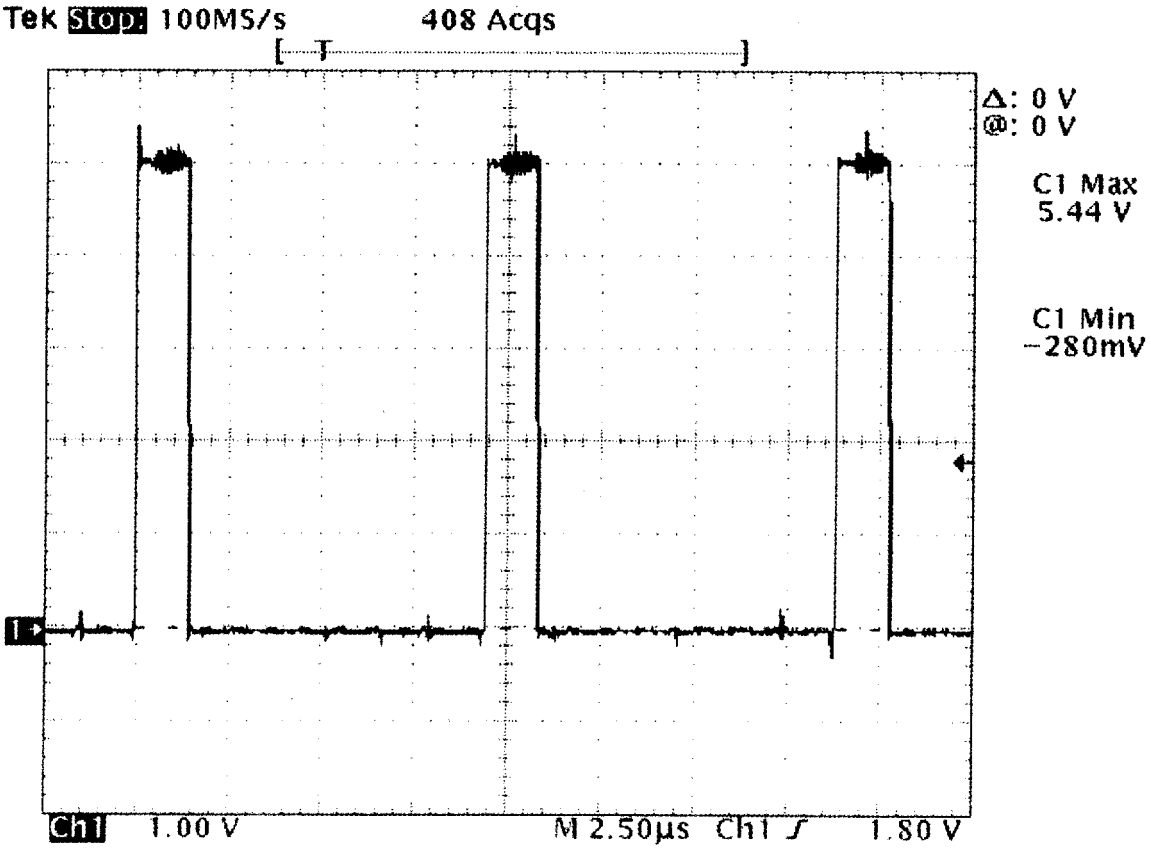

⑳ AFC

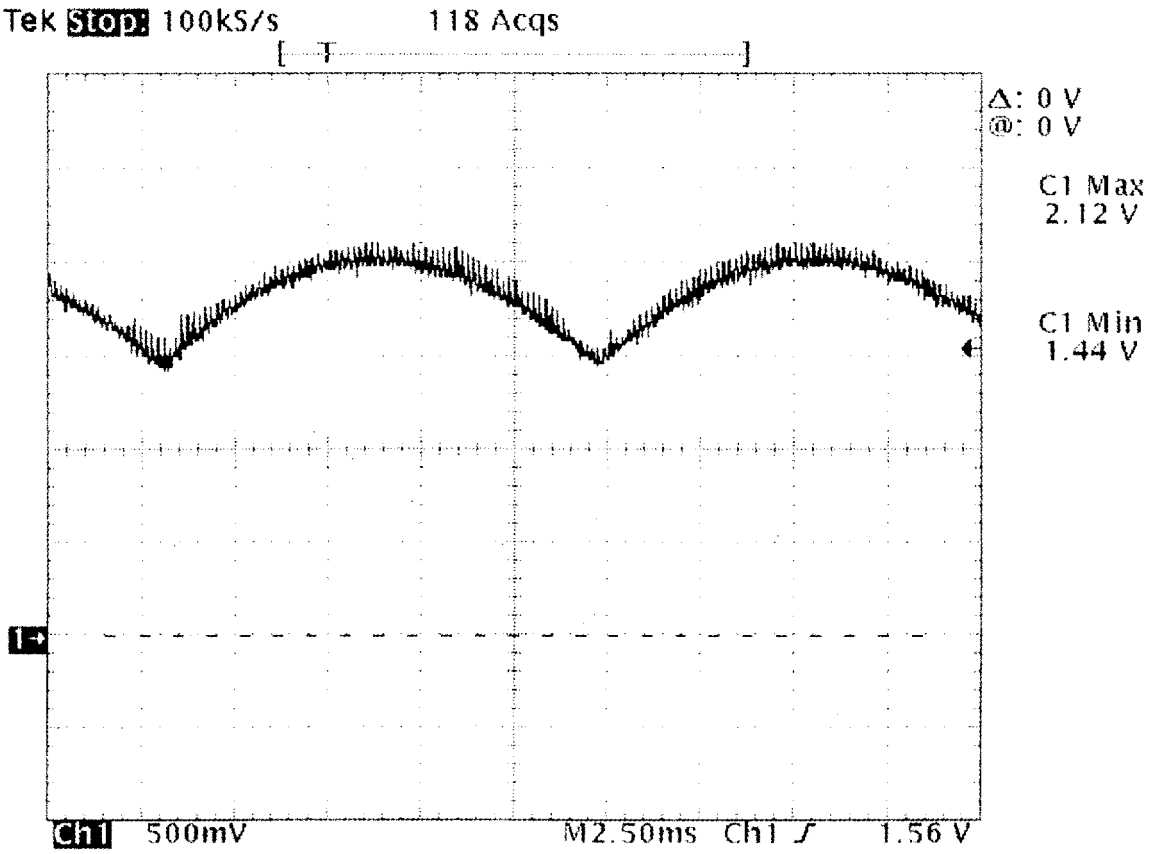
Tek Stop: 100kS/s
118 Acqs
Δ: 0 V
@: 0 V
C1 Max
2.12 V
C1 Min
1.44 V
Ch1 500mV
M2.50ms Ch1 ∫ 1.56 V

㉑ EW

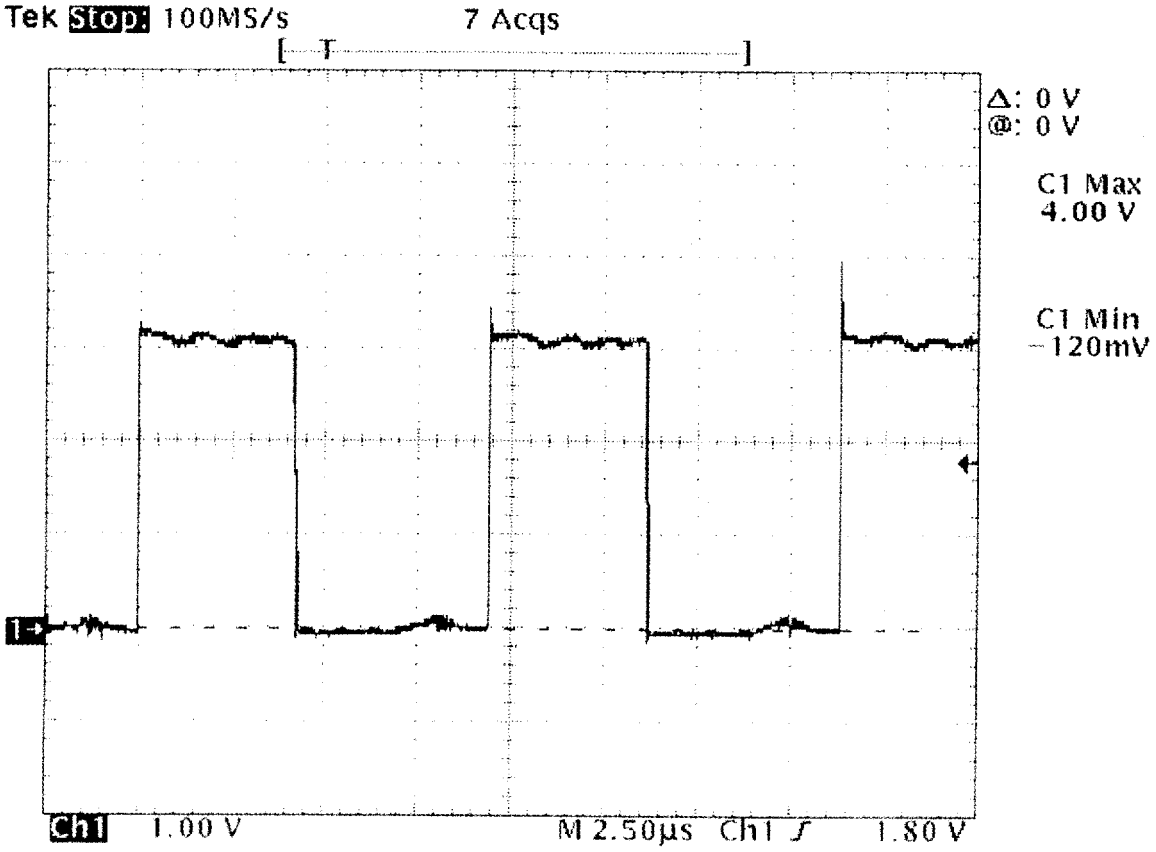
Tek Stop: 100MS/s
7 Acqs
Δ: 0 V
@: 0 V
C1 Max
4.00 V
C1 Min
−120mV
Ch1 1.00 V
M 2.50µs Ch1 ∫ 1.80 V

㉒ HD

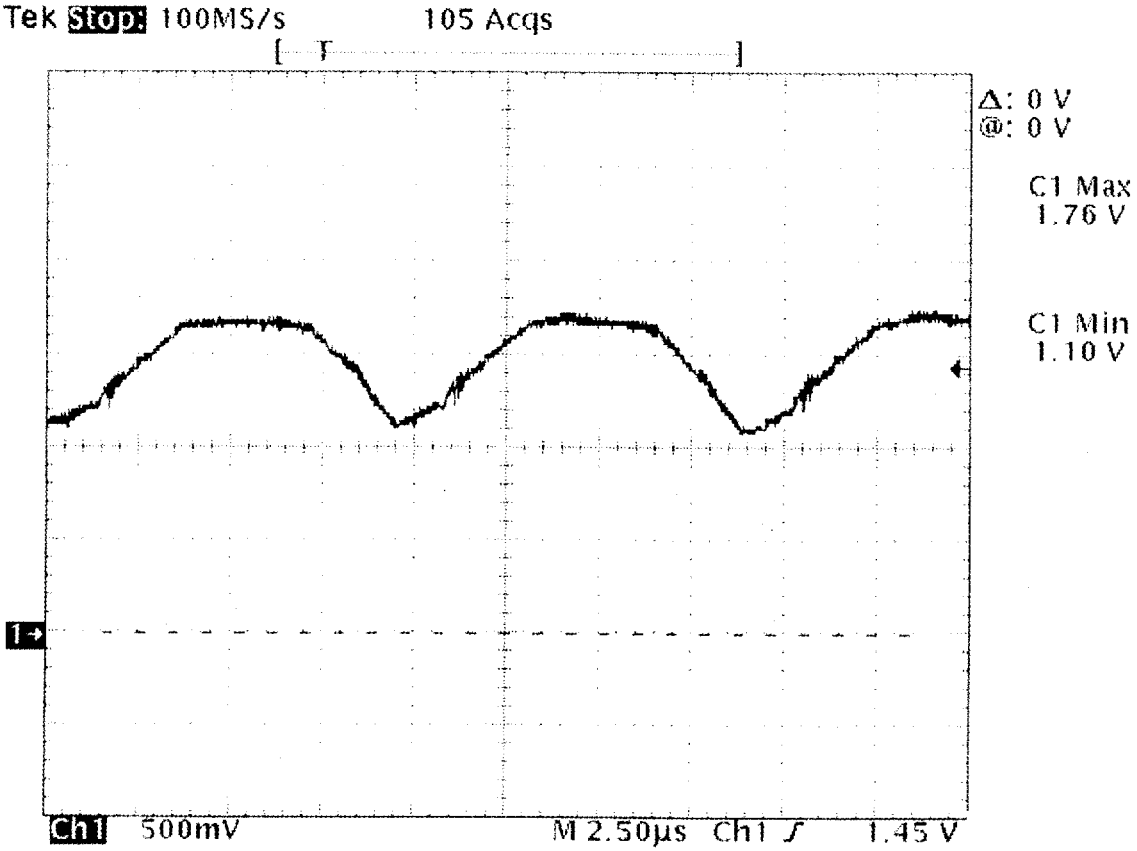
Tek Stop: 100MS/s 105 Acqs
Δ: 0 V
@: 0 V
C1 Max
1.76 V
C1 Min
1.10 V
Ch1 500mV M 2.50µs Ch1 ƒ 1.45 V

㉓ HDF

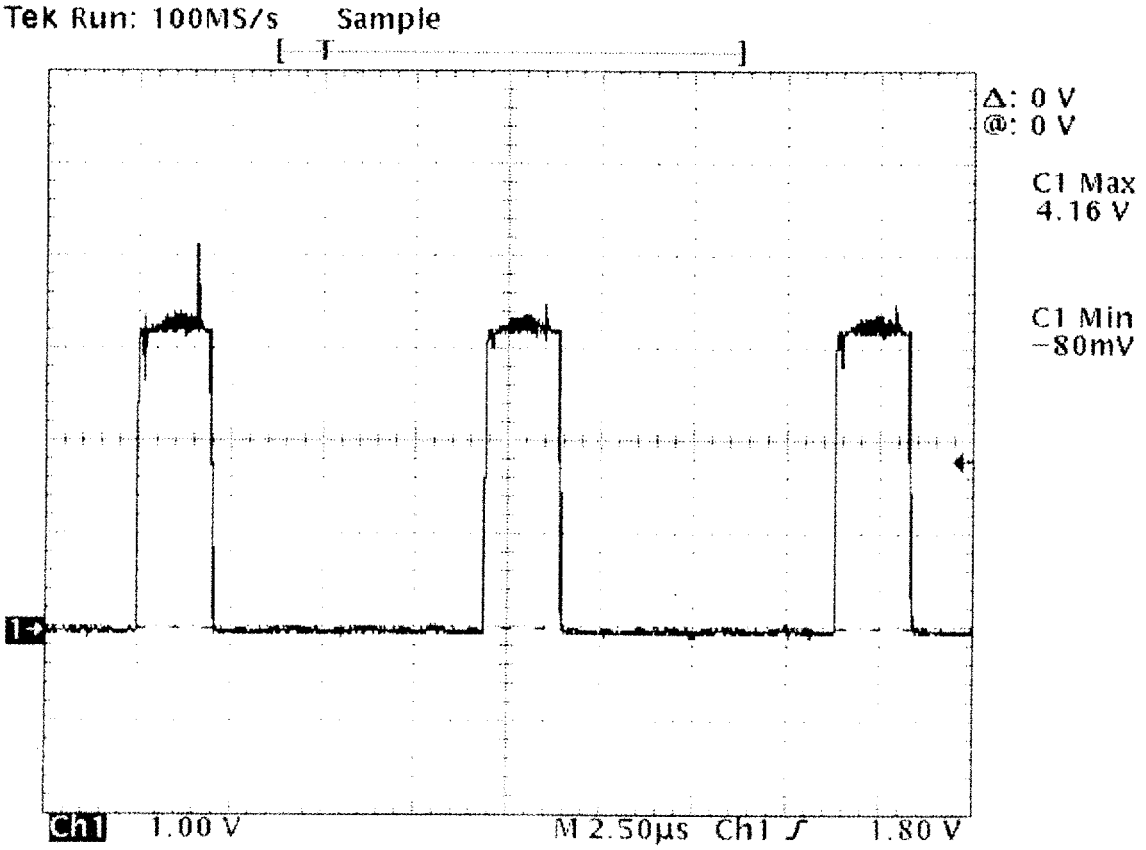
Tek Run: 100MS/s Sample
Δ: 0 V
@: 0 V
C1 Max
4.16 V
C1 Min
−80mV
Ch1 1.00 V M 2.50µs Ch1 ƒ 1.80 V

㉔ HV-BLK

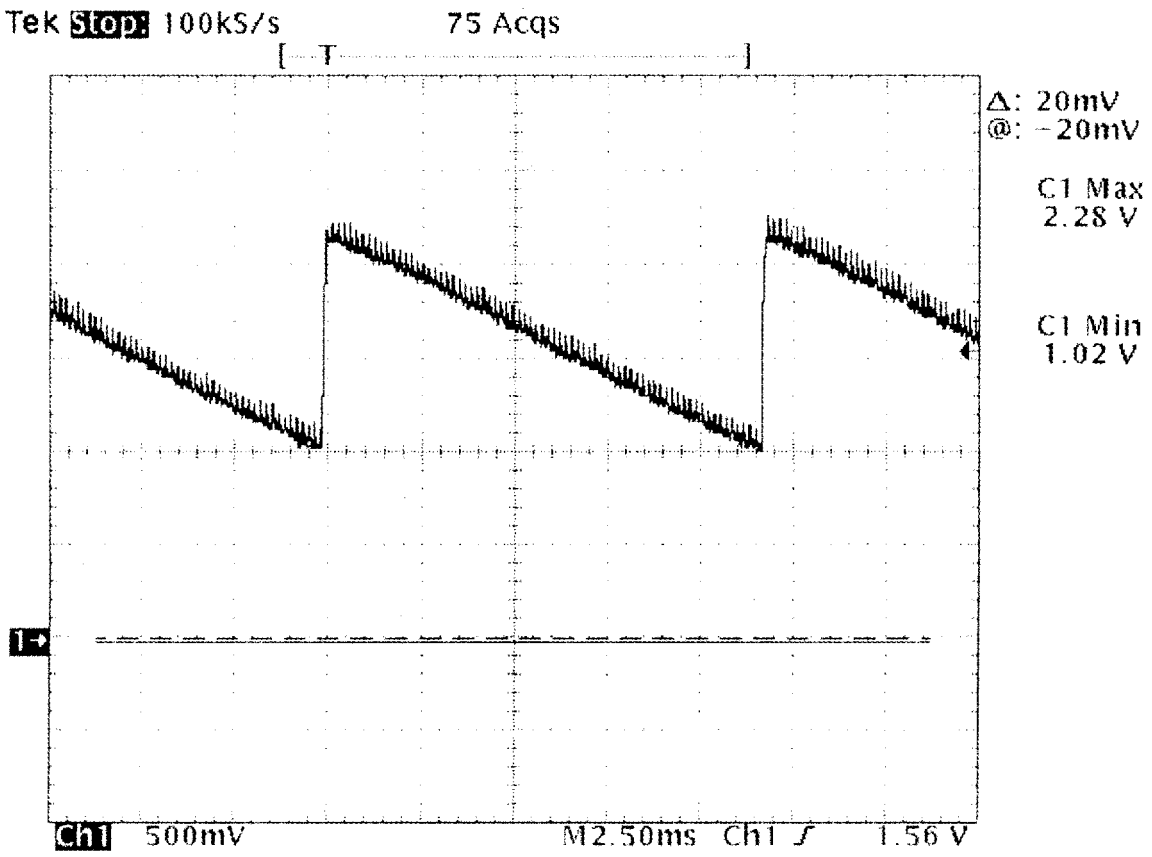
Tek Stop: 100kS/s 75 Acqs
Δ: 20mV
@: -20mV
C1 Max
2.28 V
C1 Min
1.02 V
Ch1 500mV M2.50ms Ch1 ƒ 1.56 V

㉕ V-SAW

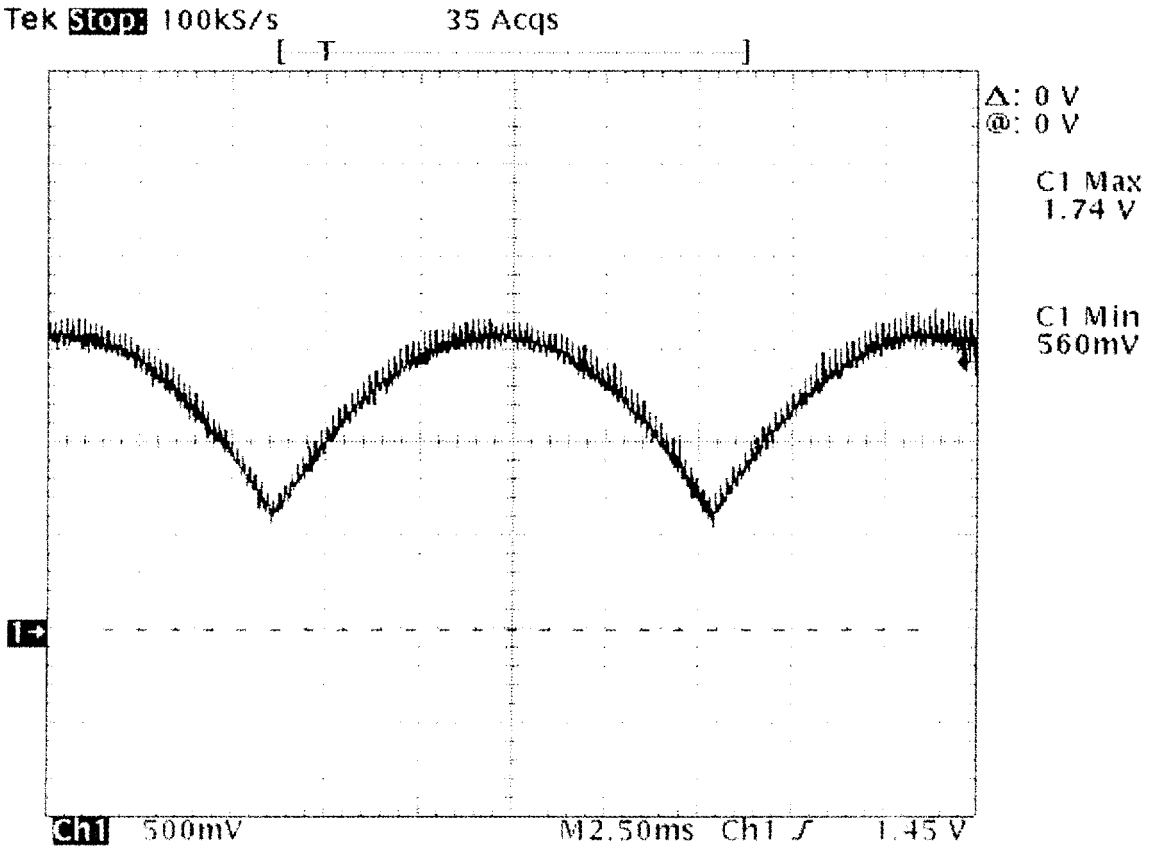
Tek Stop: 100kS/s 35 Acqs
Δ: 0 V
@: 0 V
C1 Max
1.74 V
C1 Min
560mV
Ch1 500mV M2.50ms Ch1 ƒ 1.45 V

㉖ VDF

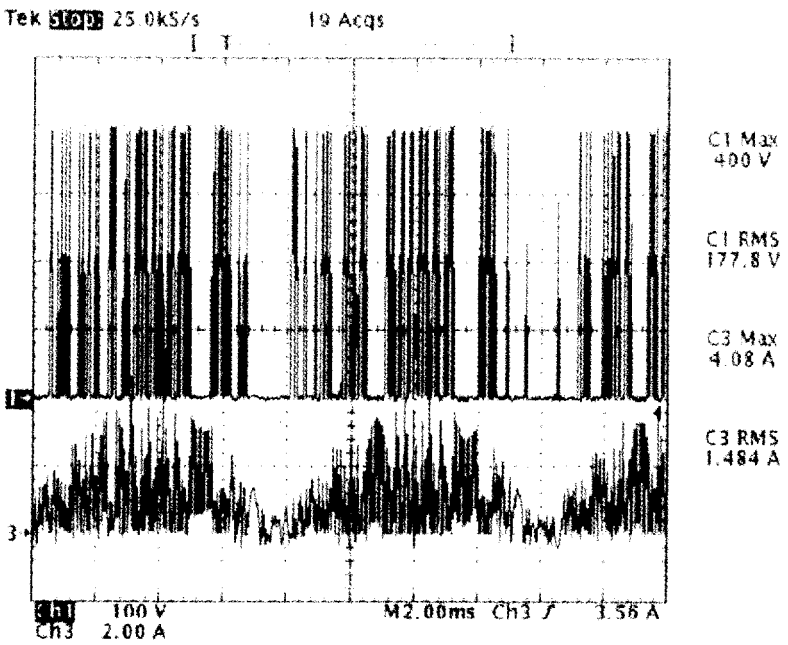

㉗ fig. 901 Top:Q901 Vds
Bottom:Q901 Id

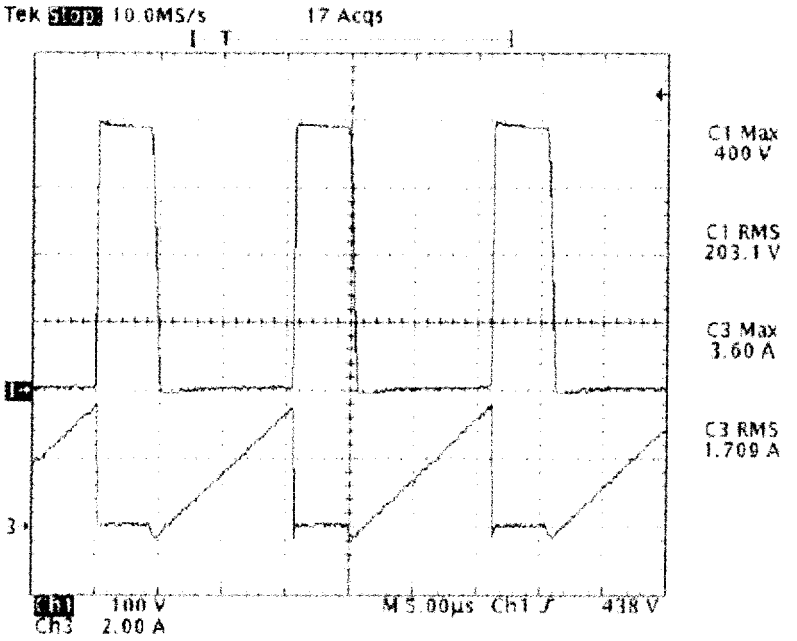

㉘ fig. 902 Top:Q901 Vds (expanded)
Bottom:Q901 Id

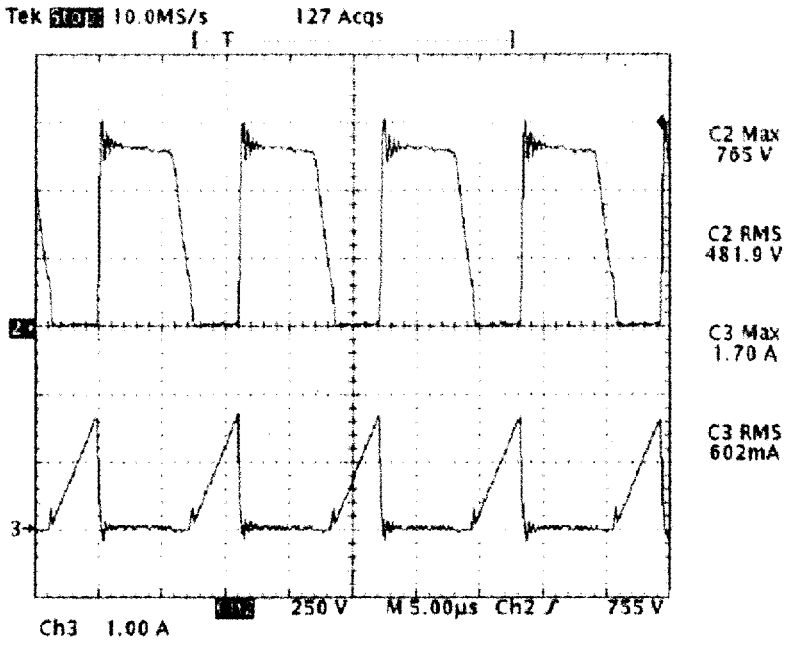

㉙ fig. 903 Top:Q902 Vds
Bottom:Q902 Id

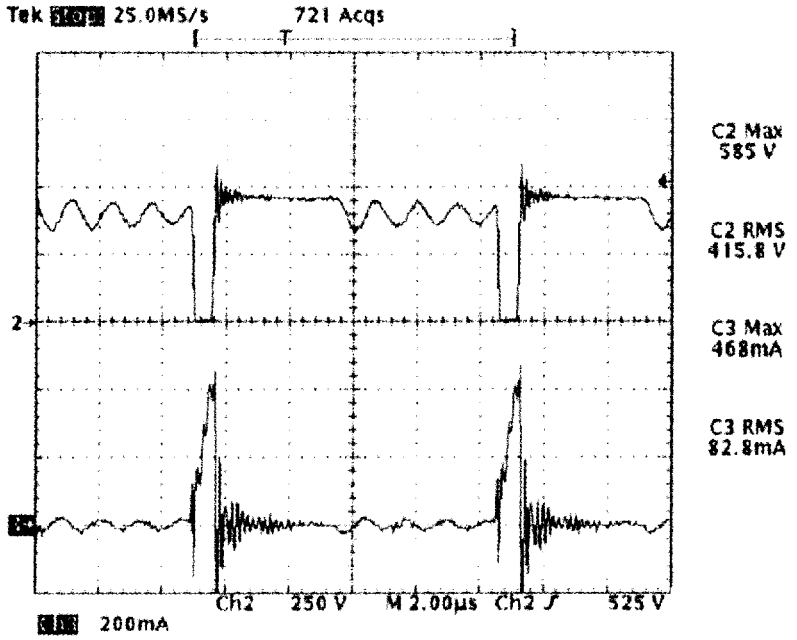

㉚ fig. 904 Top:Q903 Vds(expanded)
Bottom:Q903 Id

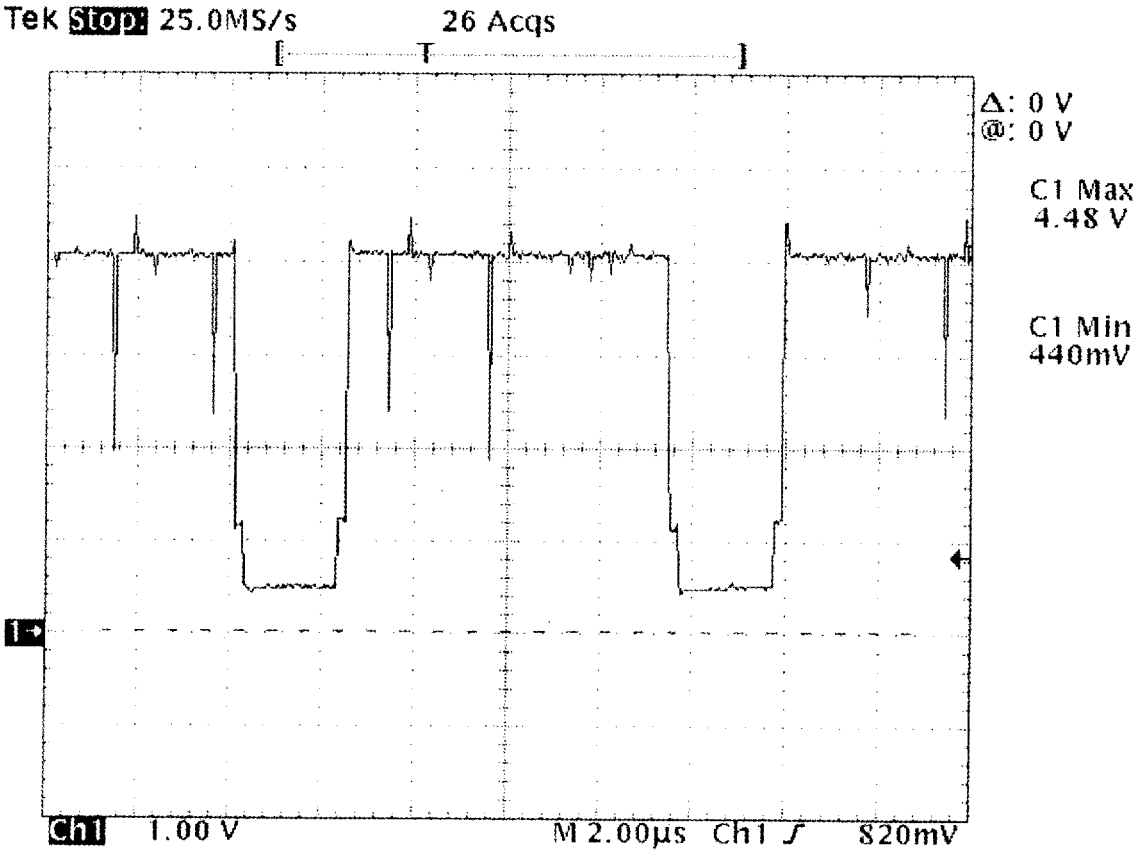

㉛ VIDEO-IN

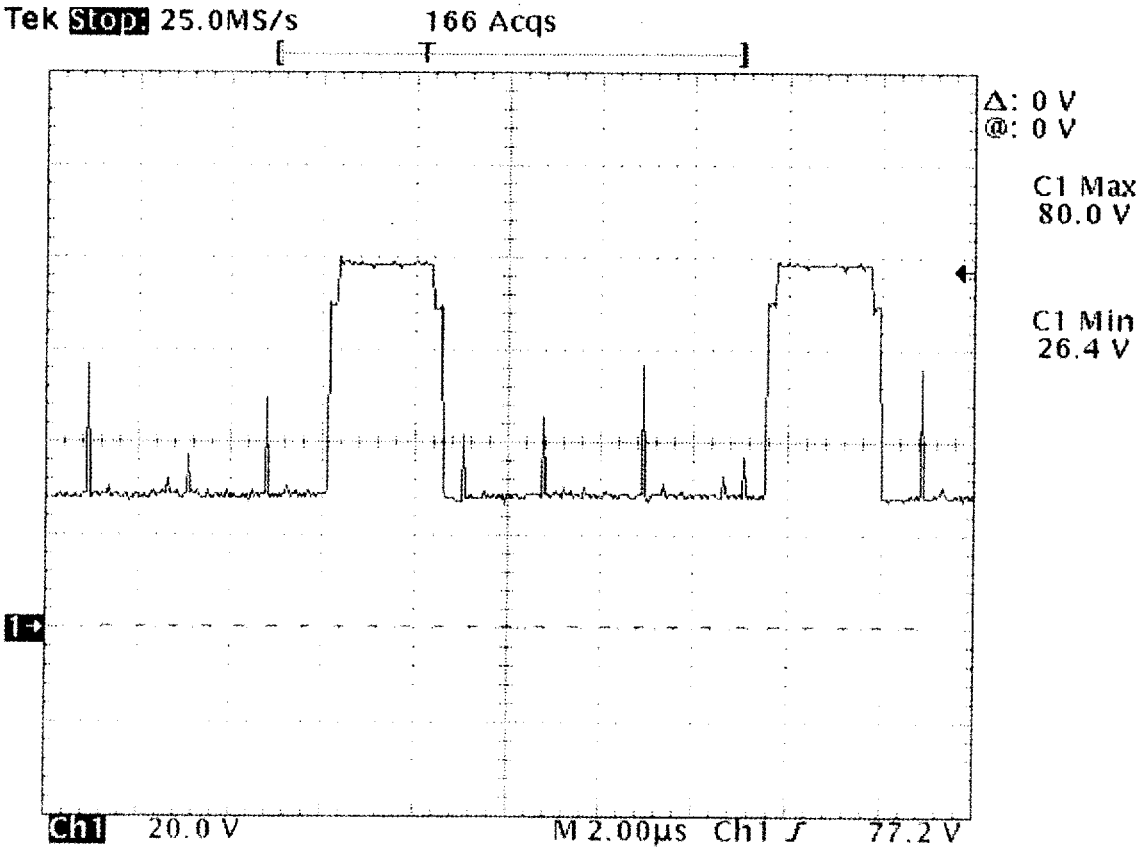

㉜ VIDEO-OUT

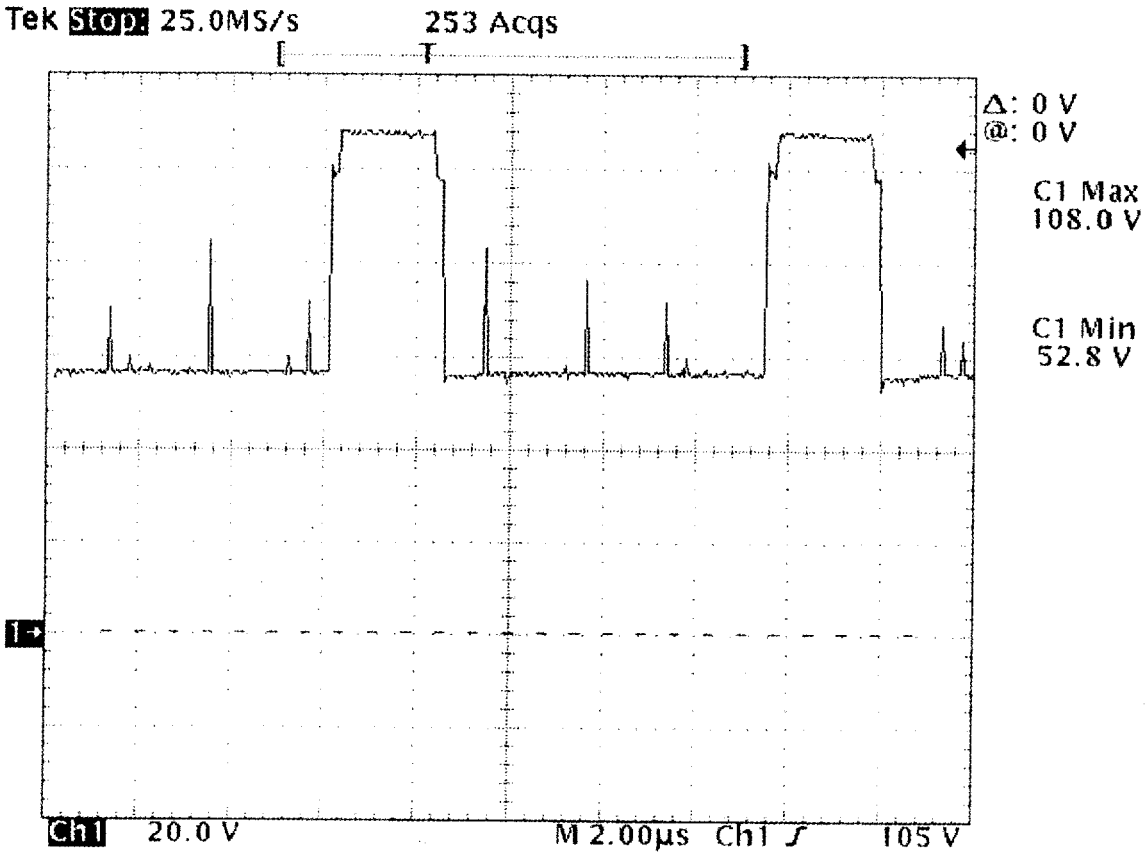
Tek Stop: 25.0MS/s
253 Acqs
Δ: 0 V
@: 0 V
C1 Max
108.0 V
C1 Min
52.8 V
Ch1 20.0 V
M 2.00µs Ch1 ∫ 105 V

㉝ CRT

2. Adjustment procedure

2.1 Measuring instruments

(1)Signal generator A: Astro Design VG-812 or equivalent
(2)Signal generator B: Astro Design VG-829 or equivalent
(3)DC voltmeter: 150V 0.5 Class or digital voltmeter
(4)High voltage meter: 0.5 Class that can measure 30KV
(5)Luminance meter: Minolta color analyzer CA-100 or equivalent
(6)AC voltmeter: 150V/300V 0.5 Class
(7)Oscilloscope: Scope with band of 100MHz or more
(8)Landing measuring device: Felmo product
(9)Double scale: For width and distortion measurement
(10)Withstand voltage meter: Kikusui Model TOS8650 or equivalent
(11)Grounding conductivity measuring instrument: CLARE U.K. product

2.2 Preparatory inspections

(1) There must be no cracks or remarkable contamination on the PWB.
(2) There must be no remarkable lifting or inclination of the parts on the PWB, and the parts must not be touching.
(3) The connectors must be securely inserted without crimping faults.
(4) The CRT socket, anode cap and focus lead must be securely mounted.
(5) The lead wires must not be pressed against the edges of the board.
(6) The lead wires must not touch the high temperature parts such as the R-METAL, R-CEMENT or TR with FIN.
(7) The board must not be bent, remarkably contaminated or scratched.
(8) The CRT has no scratch or chipping.
(9) Each potentiometer must turn smoothly.
(10) Always set each potentiometer to the following positions before turning the power ON.

Potentiometer default settings

PWB name	IC sources	Name (symbol)	Default adjustment position	Remarks
PWB-MAIN	VR5A1	H-POSI	Center	
		FOCUS1	Center	FBT
		FOCUS2	Center	FBT
		SCREEN	Completely counterclockwise	FBT

2.3 Names of each monitor part

2.3.1 Configuration of front control panel

a : Power button
b : Power-ON indicator
c : EXIT button
d : CONTROL ▲ / ▼
e : CONTROL (-) / (+)
f : PROCEED button
g : RESET button

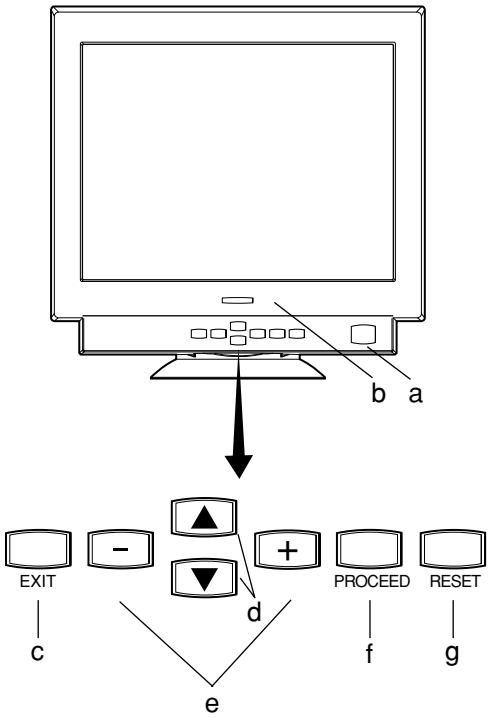

Figure 1 Front control panel

2.3.2 OSM display matrix

2.3.2.1 User mode

Adjustment items	Setting contents	Default setting	Setting classification	
			By timings	Common
OSM group USER 1				
BRIGHTNESS		CENTER		○
CONTRAST		MAX		○
DEGAUSS				
OSM group USER 2				
LEFT / RIGHT			○	
DOWN / UP		CENTER	○	
NARROW / WIDE			○	
SHORT / TALL			○	
OSM group USER 3				
COLOR CONTROL	1 / 2 / 3 / sRGB / 5	COLOR NO.1	○	
R				○
G				○
B				○
OSM group USER 4				
IN / OUT			○	
LEFT / RIGHT			○	
TILT			○	
ALIGN			○	
ROTATE		CENTER		○
OSM group USER 5				
MOIRE CANCELER		0	○	
BASIC CONVERGENCE				
HORIZONTAL		CENTER		○
VERTICAL		CENTER		○
CORNER CORRECTION				
TOP			○	
TOP BALANCE			○	
BOTTOM			○	
BOTTOM BALANCE			○	
LINEARITY				
VERTICAL			○	
VERTICAL BALANCE			○	
GLOBAL SYNC				
TOP LEFT		CENTER		○
TOP RIGHT		CENTER		○
BOTTOM LEFT		CENTER		○
BOTTOM RIGHT		CENTER		○
AUTO SAVE	OFF / ON	ON		
FACTORY PRESET				
OSM group USER 6				
LANGUAGE	ENG/GER/FRA/ESP/ITA/SVE	ENGLISH		○
OSM POSITION	C / TL / TR / BL / BR	CENTER		○
OSM TURN OFF	10,20,30,45,60,120SEC	45SEC		○
OSM LOCK OUT		Confirm that the unit is not LOCKED OUT.		○
IPM	ENABLE / DISABLE	ENABLE		○
EDGE LOCK	1 / 2	1	○	
OSM group USER 7				
DISPLAY MODE				
MONITOR INFO.				
MODEL		FE1250 PLUS		○
SERIAL NUMBER		Serial No. of the applicable unit		○
REFRESH NOTIFIER	OFF / ON	OFF		○

*) CENTER : The factory adjustment value called when RESET button is pressed and then PROCEED button is pressed.

2.3.2.2 Factory mode

Adjustment items	Setting contents	Default setting	Setting classification	
			By timings	Common
OSM group USER 1				
BRIGHTNESS	0~254	for EUR:60, for the others:127		○
CONTRAST	0~254	254		○
DEGAUSS				
OSM group USER 2				
LEFT / RIGHT	0~254		○	
PF	0~254		○	
NARROW / WIDE	0~254		○	
SHORT / TALL	0~254		○	
OSM group USER 3				
COLOR CONTROL	1 / 2 / 3 / sRGB / 5	COLOR NO.1	○	
R	0~254			○
G	0~254			○
B	0~254			○
OSM group USER 4				
IN / OUT	0~254		○	
LEFT / RIGHT	0~254		○	
TILT	0~254		○	
ALIGN	0~254		○	
ROTATE	0~254			○
OSM group USER 5				
MOIRE CANCELER	0~127	0	○	
BASIC CONVERGENCE				
HORIZONTAL	0~254			○
VERTICAL	0~254			○
CORNER CORRECTION				
TOP	0~254		○	
TOP BALANCE	0~254		○	
BOTTOM	0~254		○	
BOTTOM BALANCE	0~254		○	
PCC-CENTER	0~254		○	
PCC-SINE	0~254		○	
LINEARITY				
VERTICAL	0~254		○	
VERTICAL BALANCE	0~254		○	
GLOBAL SYNC				
TOP LEFT	0~254			○
TOP RIGHT	0~254			○
BOTTOM LEFT	0~254			○
BOTTOM RIGHT	0~254			○
AUTO SAVE	OFF / ON	ON		
FACTORY PRESET				
OSM group USER 6				
LANGUAGE	ENG/GER/FRA/ESP/ITA/SVE	ENGLISH		○
OSM POSITION	C / TL / TR / BL / BR	CENTER		○
OSM TURN OFF	10,20,30,45,60,120SEC	45SEC (DATA 03H)		○
OSM LOCK OUT				○
IPM	ENABLE / DISABLE	ENABLE		○
EDGE LOCK	1 / 2	1 (DATA 01H)	○	
OSM group USER 7				
DISPLAY MODE				
MONITOR INFO.				
MODEL		FE1250 PLUS		○
SERIAL NUMBER		Serial No. of the applicable unit		○
REFRESH NOTIFIER	OFF / ON	OFF		○

Adjustment items	Setting contents	Default setting	Setting classification	
			By timings	Common
FACT 1				
H-PURITY	0 / 1 / 2	0		○
C/P PURITY OFF	0 (OFF) / 1 (ON)	1 (ON)		○
PURITY OFF	0 (OFF) / 1 (ON)	1 (ON)		○
SUB-BRIGHT	0~480	320		○
ABL	0~219	219		○
HEATER-OFF	0~254			○
FACT 2				
DBF H-AMP	0~254		○	
DBF H-PHASE	0~100		○	
DBF V-AMP	0~127		○	
B-LOW	0~167			○
B-HIGH	0~167			○
FACT 3				
R-BIAS 9300	0~254	30		○
G-BIAS 9300	0~254	30		○
B-BIAS 9300	0~254	30		○
R-BIAS 6500	0~254	30		○
G-BIAS 6500	0~254	30		○
B-BIAS 6500	0~254	30		○
FACT 4				
R-BIAS 5000	0~254	30		○
G-BIAS 5000	0~254	30		○
B-BIAS 5000	0~254	30		○
FACT 5				
YHTT	0~254	127		○
YHTB	0~254	127		○
YHJT	0~254	127		○
YHJB	0~254	127		○
XH-L	0~254	127		○
XH-R	0~254	127		○
FACT 6				
PQH-TL	0~254	127		○
PQH-TR	0~254	127		○
PQH-BL	0~254	127		○
PQH-BR	0~254	127		○
S3H-TL	0~254	127		○
S3H-TR	0~254	127		○
S3H-BL	0~254	127		○
S3H-BR	0~254	127		○
FACT 7				
YVTT	0~254	127		○
YVTB	0~254	127		○
YVJT	0~254	127		○
YVJB	0~254	127		○
XV-L	0~254	127		○
XV-R	0~254	127		○
FACT 8				
PQV-TL	0~254	127		○
PQV-TR	0~254	127		○
PQV-BL	0~254	127		○
PQV-BR	0~254	127		○
S3V-TL	0~254	127		○
S3V-TR	0~254	127		○
S3V-BL	0~254	127		○
S3V-BR	0~254	127		○
FACT 9				
DESTINATION	USA / EUR	USA / EUR		○
HOURS RUNNING				
CPU VERSION				
FACT A				
MODE SELECT	0~254	0		
FACT B				
HIGH VOLTAGE ADJUST				○
HV-ADJ	0~168			○
HV-TMP	HVADJ~254			○
XPRO CALIBRATE	PROCEED			
XPRO LEVEL	0~254	254		○

2.4 Adjustment

2.4.1 How to select the factory adjustment (FACTORY) mode

2.4.1.1 Selecting with front panel switches

(1) Turn the power ON while holding down EXIT button.
(2) After step (1), release the button after one to two seconds, and press (-) button.
(3) Confirm that 255 is displayed for FACT DATA in MODE SELECT.
(4) Set to 05 with (+) button.
(5) When PROCEED button is pressed, the factory mode will be entered.
This factory adjustment mode is entered with the above steps.

*The factory adjustment mode remains valid even after the power is turned OFF.
Note that steps (3) to (4) must be carried out within ten seconds. If ten seconds are exceeded, the mode will return to the user mode.

<Returning to the user mode from the factory mode>

(1) OSM is displayed with the group selection, and select MODE SELECT in FACT A.
(2) Set the counter value of FACT DATA to 10 with (-) / (+) buttons.
(3) When PROCEED button is pressed, the mode will return to the user mode.

2.4.2 Adjustments before aging

Status indicator	Adjustment item	Adjustment mode/set	Imput signal/pattern
	Before aging		The only the sync. signal of
			No. 12:106.25K / 85Hz, 1600x1200

2.4.2.1 Adjusting the high voltage and high voltage protector

Status indicator	Adjustment item	Adjustment mode/set	Imput signal/pattern
	High voltage and high		The only the sync. signal of
	voltage protector		No. 12:106.25K / 85Hz, 1600x1200

(Timing No. 12 (106.25 kHz/85 Hz, 1600 x 1200) SYNC signal is only input)

(1) Turn the monitor power OFF and connect a high voltage indicator to the anode of CRT before turning the monitor power ON.
(2) Select MODE SELECT in FACT A on OSM and set to 250 using (-) button before pushing PROCEED button.
(3) Select HV-ADJ on OSM to adjust the high voltage to 27.0kV±0.5kV.
(4) Select HV-TMP (HV-ADJUST-TEMP) on OSM and turn the screen VR all the way down counter-clockwise before adjusting the high voltage to 30.5kV±0.5kV by manipulating (-) / (+) buttons.
(5) Select XPRO-CALIBRATE using ▼ button before pushing PROCEED button. (With (+) button pushed, the microcomputer automatically sets the protector, causing the high voltage to return to 27.0kV±0.5kV.)
(6) Rotate the screen VR so that the OSM can be confirmed.
(7) Select HV-TMP (HV-ADJUST-TEMP) on OSM by the manipulation shown above and turn the screen VR all the way down counter-clockwise.
(8) Raise the voltage manipulating (+) button and make sure that the high-voltage protection circuit gets activated at 30.5kV±0.5kV.

Note) Adjustment can be made with the screen VR turned all the way down counter-clockwise.

* Method of releasing high voltage protector

1) Input picture signal into monitor (Timing No. 12 1600x1200 106.25k/85)
2) While pressing (+) / (-) buttons simultaneously, turn ON the power.
3) Keep pressing (+) / (-) buttons for approx. 30 seconds.
4) Release (-) button only, and keep pressing (+) button only for 15 seconds or more.
5) Lighting pattern of LED changes.
   (It changes to POWER SAVE. If not, it is a failure.)
6) Turn the power OFF / ON, and the set value of the high voltage protector is reset.

2.4.2.2 SCREEN voltage / FOCUS adjustment

(1) Connect a high voltage meter to the TP-SC terminal on the PWB-CRT.
(2) Set to 700V ± 5V with the FBT picture potentiometer.
(3) Adjust the focus pack "FOCUS 1, 2" so that both edges of the picture are clear.

2.4.2.3 Shock test

(1) Display the "color bar".
(2) Confirm that there is no abnormality in the image when shock is applied on the monitor.

2.4.2.4 Preadjustment before aging

(1) Display a "full white".
(2) Confirm that the R, G and B channel images are output.
(3) Confirm that the LEFT / RIGHT in OSM group User 2, picture position, picture size, PCC and balance can be controlled, and approximately adjust.
(4) Confirm that the OSM IPM is DISABLE.
(5) Enter the factory mode (aging mode) beforehand.
(6) Disconnect the signal and confirm that the following display appears on the OSM. Then, adjust the picture luminance using SUB-BRIGHT adjustment, and carry out heat run for 60 minutes or more.

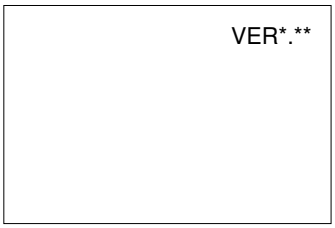

2.4.2.5 Adjusting the landing (ITC/4 corner purity (GLOBAL SYNC) adjustment)

Status indicator	Adjustment item	Adjustment mode/set	Imput signal/pattern
	landing		No. 12:106.25K / 85Hz, 1600x1200
			Full green

(1) Input the timing No. 12 (106.25kHz/85Hz, 1600x1200) full green signal.
(2) Turn OFF the monitor power to carry out hand degaussing.
(3) Select TL (TOP-LEFT) on OSM.
(4) Adjust to the best condition using (-) / (+) buttons. Here, make sure that the adjusted value is within the range of OSM display = 74 to 180.
(5) Carry out similar adjustment for TR (TOP RIGHT) / BL (BOTTOM LEFT) / BR (BOTTOM RIGHT).
(6) Input the timing No.12 (106.25kHz / 85Hz, 1600 x 1200) full white signal.

Note) When the substrate is replaced at the time of repair, set TL/TR/BL/BR to the values before replacement before carrying out adjustment.

2.4.3 Adjustments after aging

2.4.3.1 +B adjustment

Input the sync. signal of the following timings to adjust the picture width to 396 ± 4mm.

Timing No.	H-frequency	OSM adjustment item
A	30.0kHz	+B-L
12	106.25kHz	+B-H

2.4.4 Adjusting the picture size, position and distortion

The manual adjustment methods are explained below. The adjustments are executed in the factory adjustment (factory) mode.

Adjust the picture size to the value indicated in the list of adjustment values.(Refer to 2.5.1.10 Adjustment value list.)

Adjust the distortion to the value indicated in the picture performance inspection item. (Refer to 2.5.1.8 Picture distortion.)

2.4.4.1 Adjusting the picture inclination

Status indicator	Adjustment item	Adjustment mode/set	Imput signal/pattern
	Picutre inclination	Factory	No. 12:106.25K / 85Hz, 1600x1200
			Crosshatch with frame

Set the OSM to ROTATION, and using (-) / (+) buttons, set the raster inclination to be horizontal to the CRT face surface.

2.4.4.2 Adjusting the back raster position

Status indicator	Adjustment item	Adjustment mode/set	Imput signal/pattern
	Back raster position	Factory	No. 12:106.25K / 85Hz, 1600x1200
			Only the sync. signal input

(1) Set BRT to 100% to show the back raster.
(2) Adjust the horizontal back raster position to the center of the bezel using H-POSI (VR5A1). At this time, the raster width will be |L1-L2| ≤ 2.0mm.

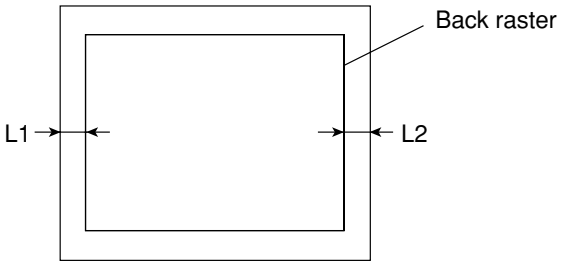

2.4.4.3 Adjusting the left/right distortion, picture width, picture position (H-PHASE) and vertical linearity (all preset)

(1) Set V-POSI of the user mode to 50%.
Confirm that DOWN / UP adjustment bar in User mode is at apploximately center.

<Setting in the factory mode for the following steps>

(2) Adjust the vertical size to approx. 297mm, and the vertical position to the approximate center.
(3) Select VERTICAL and VERTICAL BALANCE in LINEARITY with the OSM, and adjust so that the vertical linearity is equal at the very top of the picture, at the very bottom of the picture, and at the center of the picture.

(4) Select DOWN / UP and SHORT / TALL with the OSM, and adjust the vertical width and vertical position to the specified values using (-) / (+) buttons.
(5) Select IN / OUT, LEFT-RIGHT in OSM group User 4, PCC-CENTER, TOP-PIN, and BOTTOM-PIN with the OSM, and adjust the vertical line at both side of the picture to the straight line using (-) / (+) buttons.
(6) If the left and right distortions differ, select PIN-BALANCE, TILT, TOP-BALANCE and BOTTOM-BALANCE with the OSM, and adjust so that the distortions are visually balanced.
(7) Select LEFT / RIGHT in OSM group User 2 with the OSM, and adjust the horizontal raster position to the center of the picture using (-) / (+) buttons.
(8) Select NARROW / WIDE with the OSM, and adjust the horizontal raster width to the value given in the adjustment list using (-) / (+) buttons.
(Refer to 2.5.1.10 Adjustment value list.)
* Note (1) PCC-SINE is used only for touch up.
* Note (2) The picture position and distortion must be within the ranges given in the picture performance inspection items. (Refer to 2.5.1.8 Picture distortion.)

2.4.4.4 Adjusting the DBF amplitude and phase

(1) Connect the oscilloscope to the lead of R7B6 (AG702 side) on PWB-MAIN and to one of the signal outputs for the signal sources full R, G, B (VIDEO).
(2) Set the OSM to the select picture of DBF-H-AMP, and using (-) / (+) buttons adjust the horizontal parabola wave amplitude (image area) to the value given in the list of adjustment values. (Refer to 2.5.1.10 Adjustment value list.)
(3) Set the OSM to the select picture of DBF-H-PHASE, and using (-) / (+) buttons adjust the horizontal parabola wave phase as shown below in respect to the image signal.
(4) Set the OSM to the DBF-V-AMP select picture, and using (-) / (+) buttons adjust the vertical parabola wave amplitude (image area) to the value given in the list of adjustment values. (Refer to 2.5.1.10 Adjustment value list.)

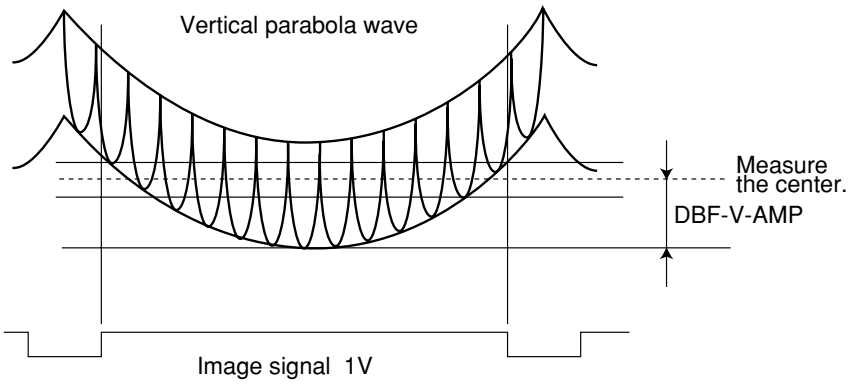

DBF-V-AMP adjustment

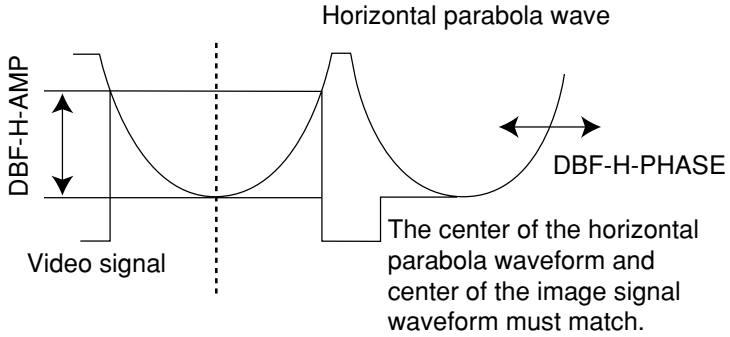

DBF-H-AMP / PHASE adjustment

2.4.5 Adjusting the cut off

Status indicator	Adjustment item	Adjustment mode/set	Imput signal/pattern
	Cut off	Factory	No. 12:106.25K / 85Hz, 1600x1200

(1) Input the timing No. 12 (106.25kHz/85Hz, 1600 x 1200). (R, G, B OFF)
(2) Set COLOR No. to 1, and set BRIGHTNESS to 127, SUB-BRIGHT to 320, and the R, G, B-BIAS 9300 to 30.
(3) Vary SUB-BRIGHT and adjust the back raster luminance to 0.3±0.1cd/m^2.
In case less than 0.3cd/m^2 even if SUB-BRIGHT was varied, change R, G, B-BIAS 9300 to adjust.
The R, G, B-BIAS 9300 data must be the same values at this time.
(4) Using two colors except for the basic colors, adjust the color coordination to the following values.
(5) Change SUB-BRIGHT, and adjust the back raster luminance to 0.3±0.1cd/m^2.
(6) If the back raster color coordination is deviated from the following values, repeat steps (4) and (5).
(7) Set the datas of COLOR sRGB G-BIAS 6500 and COLOR 5 G-BIAS 5000 to the same value as the one of COLOR 1 G-BIAS 9300.
(8) Set COLOR No. to sRGB, and change the BIAS 6500 data for the R and B colors (G-BIAS 6500 is fixed). Adjust the back raster color coordination to the following table.
(9) Set COLOR No. to 5, and change the BIAS 5000 data for the R and B colors (G-BIAS 5000 is fixed). Adjust the back raster color coordination to the following table.

NOTE) Adjustment for COLOR 2 and 3 is unnecessary.
NOTE) When BIAS 9300 is selected on OSM, COLOR 1 is automatically set.
When BIAS 6500 is selected on OSM, COLOR sRGB is automatically set.
When BIAS 5000 is selected on OSM, COLOR 5 is automatically set.
* The following table is applied for the adjustment without back cover.

Condirmation item		COLOR 1	sRGB	COLOR 5
Color coordination	x	0.283 ±0.015	0.313 ±0.015	0.345 ±0.015
	y	0.297 ±0.015	0.329 ±0.015	0.359 ±0.015

* The flow chart is provided on the next page.

Cutoff adjustment procedures

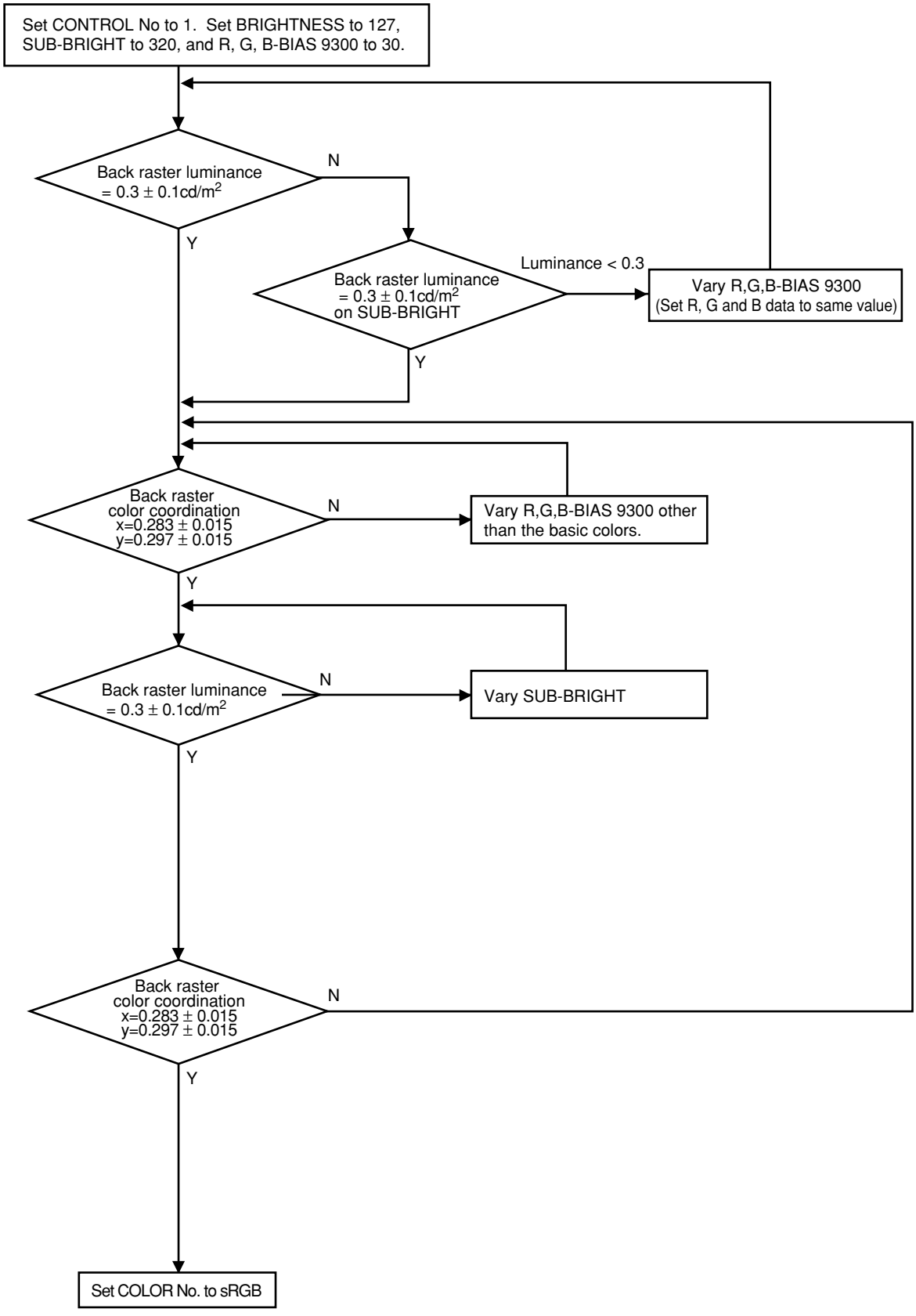

Continued on next page

Continued from previous page

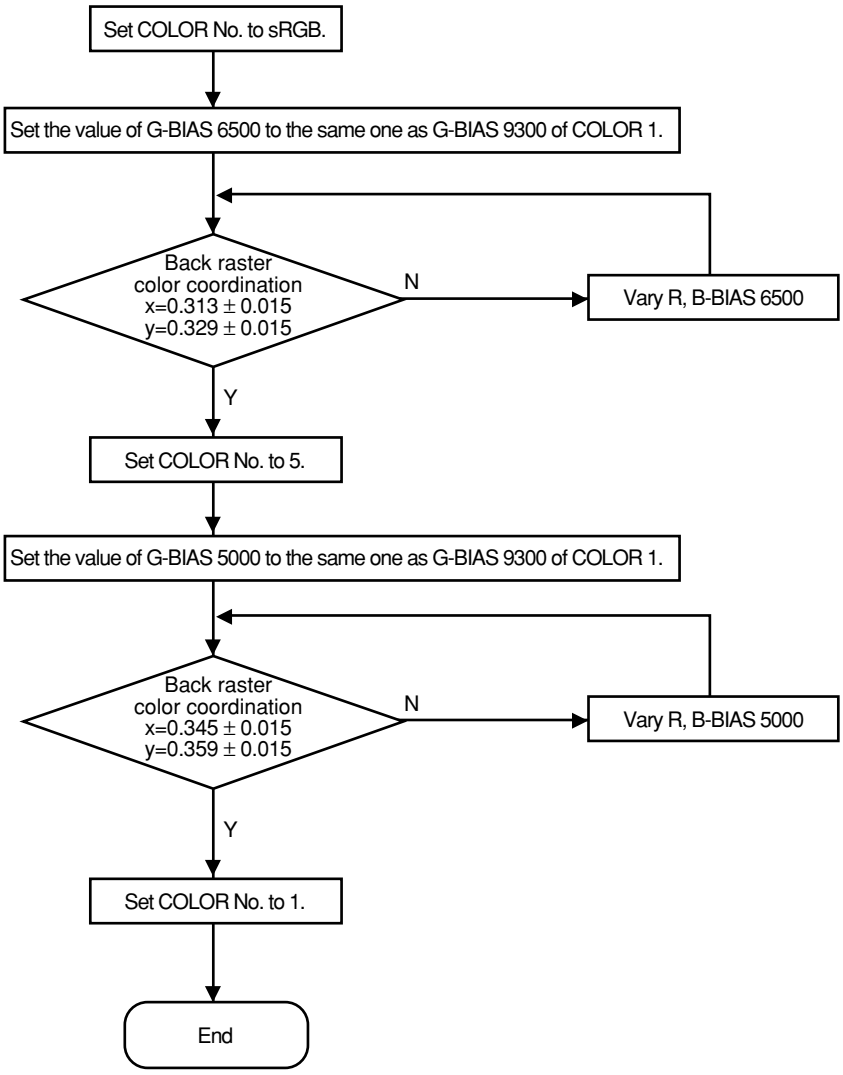

2.4.6 Adjusting the RGB drive signal

2.4.6.1 Adjusting the R, G, B drive signal (Adjustment of COLOR 1)

Status indicator	Adjustment item	Adjustment mode/set	Imput signal/pattern
	R, G, B drive signal	Factory	No. 12:106.25K / 85Hz, 1600x1200
			WINDOW picture

(1) Input the timing No.12. (106.25kHz / 85Hz, 1600 x 1200) WINDOW picture (Input amplitude = 0.7Vp-p).
(2) Select CONTRAST with the OSM, and set to MAX with (+) button.
(3) Select BRIGHTNESS with the OSM, and set the data to 127 with (-) / (+) buttons.
(4) Set the WINDOW pattern (approx. 80mm square at center of CRT picture), and input only "GREEN".
(5) Set the COLOR 1 GREEN with the OSM, and adjust the luminance to the following value with (-) / (+) buttons.
(6) Input BLUE, RED and GREEN, appropriately select the COLOR 1 BLUE and RED, and adjust the color coordination to the following value with (-) / (+) buttons.
(7) Set CONTRAST to 25cd/m^2 with the OSM to confirm that the change in color coordination is within ± 0.015 for both x and y.
*Adjust COLOR-sRGB and COLOR-5 to the following values with the same method.
If COLOR-sRGB and COLOR-5 are contented with the following value, they can be adjusted with presumption respectively.
The values of G-WINDOW are reference.
Adjustment for COLOR 2 and COLOR 3 is unnecessary.

(Note) After adjusting COLOR, always set to COLOR 1.
(The COLOR preset will be set to the default COLOR 1 with this step.)
(Remark : x and y should be adjusted within ± 0.005 (Reference value)

COLOR		1	sRGB	5	Remarks
G-WINDOW luminance		(76.0)	(67.0)	(56.0)	(Reference value)
W-WINDOW color coordination	x	0.283	0.313	0.345	± 0.005
	y	0.297	0.329	0.359	± 0.005
Full white luminance (cd/m^2)		105 or more	92 or more	77 or more	

2.4.6.2 Adjusting ABL

Status indicator	Adjustment item	Adjustment mode/set	Imput signal/pattern
	ABL	Factory	No. 12:106.25K / 85Hz, 1600x1200
			Full white

(1) Set the OSM ABL to 219.
(2) Input the timing No. 12 (106.25kHz/85Hz, 1600 x 1200).
(Full white picture input amplitude = 0.7Vp-p)
(3) Set contrast to MAX, bright to MAX, and select ABL-ADJUST with OSM. Adjust to 115cd/m^2±5 with COLOR 1.
The picture size must be approximately the value given in the list of adjustment values at this time. (Refer to 2.5.1.10 Adjustment value list.)

2.4.7 Adjusting the Purity (GLOBAL SYNC)

Status indicator	Adjustment item	Adjustment mode/set	Imput signal/pattern
	Purity	Factory	Check 4 : 85Hz, 1600x1200
			GREEN crosshatch reverse

(1) Input the check 4 timing (85Hz, 1600 x 1200) to confirm that the GREEN crosshatch is displayed in reverse.
(2) Set the chamber adjustment magnetic field to the northern hemisphere magnetic field (HORIZ. = 0mT, VERT. = +0.04mT).
(3) Demagnetize carefully the monitor with 100V handy-demagnetizer (during dagauss operation in OSM).

2.4.8 Adjusting the focus

	Normal or reverse display	Point to align with
Vertical line	Reverse display	FOCUS JUST at center of right side vertical line (circle section).
Horizontal line	Normal display	FOCUS JUST at center of screen (circle section).

<Adjusting the static focus>

Status indicator	Adjustment item	Adjustment mode/set	Imput signal/pattern
	Static focus		No. 12:106.25K/85Hz, 1600x1200
			H character, crosshatch

For steps (1) and (2), use the timing No. 12 (106.25kHz/85Hz, 1600 x 1200) H character pattern and crosshatch pattern.
For step (3), use all preset timing H character patterns and crosshatch patterns.

(1) Display a white crosshatch pattern, and adjust the focus according to "2.4.8 Adjusting the focus".
(2) If the DBF voltage is insufficient or excessive, select DBF H AMP and DBF V AMP from the OSM, and readjust with (-) / (+) buttons. Then repeat step (1), and adjust so that the following judgement conditions are satisfied.
(3) For all of the other preset timings, if the DBF voltage is insufficient or excessive, select DBF H AMP and DBF V AMP from the OSM, and readjust with (-) / (+) buttons.

*Adjustment votlage max value:

DBF-H-AMP	H width: 396mm:	430V
	H width: 371mm:	400V
DBF-V-AMP	V width: 297mm:	190V

The focus is judged as follows.

2.4.9 Adjusting the convergence

Timing	Judgment pattern (Note 1) (Note 2)
Normal display (All preset)	Crosshatch pattern
Reverse display Resolution: ≤1600x1200 Resolution: >1600x1200	 Judge with pattern A Judge with pattern B

(Note 1) Pattern A: Font 7 x 9, Cell 10 x 11, e character
Pattern B: Font 7 x 9, Cell 10 x 11, H character

(Note 2) Focus judgement: Crosshatch pattern should be used for normal display judgement
Core: Judge the ratio of the halo (total area 1:1).
To judge the reverse display, do not carry out a relative evaluation with the other point on the screen. Instead, judge whether the e (H) character can be read at that point.

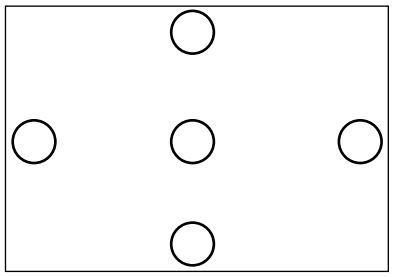

Focus attention point

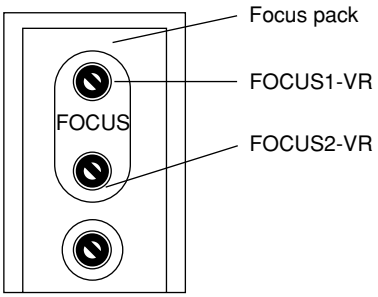

2.4.9.1 Adjusting with ITC

Before adjusting the center mis-convergence and axial mis-convergence, carry out sufficient full white aging (100cd/m^2 or more, for one hour or more). Then, adjust with the following timing.

Timing: No. 12 (106.25kHz/85Hz, 1600 x 1200) crosshatch pattern

Confirm that the following DDCP default setting is as shown in the table.

Factory mode in section 2.3.2.2 OSM display matrix
H-CONVERGENCE, V-CONVERGENCE,

Factory mode in section 2.3.2.2 OSM display matrix
FACT1, FACT5, FACT6, FACT7, FACT8

Adjust the horizontal and vertical convergence to the optimum setting with the CRT CP ring, etc.

(Refer to following drawings.)

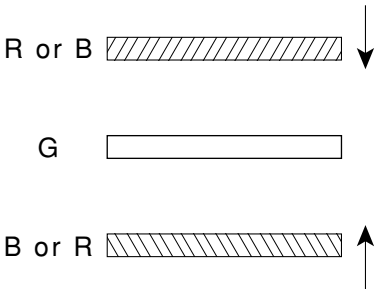

Vertical convergence

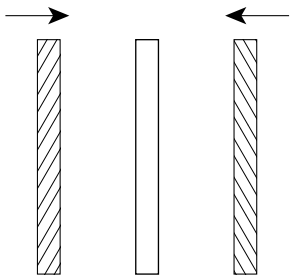

Horizontal convergence

Adjusting the center misconvergence and axial misconvergence

Adjustment item name	Problem	Adjustment point	Adjustment procedure
H-STATIC V-STATIC	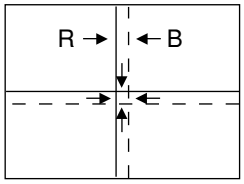	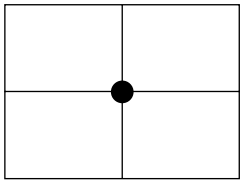	Adjust to ± 0.1mm or less with CP-ASSY 4P.
YH axial deviation	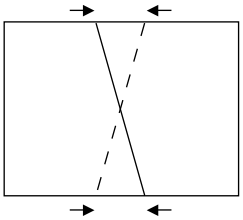	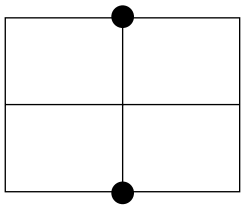	Adjust so that TOP+BOTTOM are ± 0.1mm or less with YH volume.
YV axial deviation	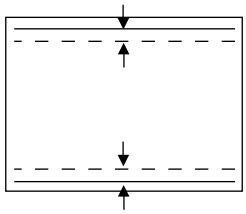	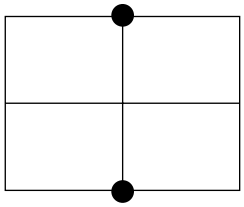	Adjust so that TOP-BOTTOM is ± 0.1mm or less with YV volume.
XH axial deviation	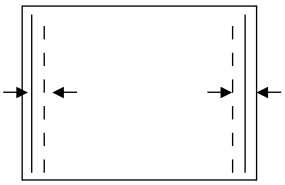		Adjust so that LEFT-RIGHT is ± 0.15mm or less with XH slider.
XV characteristics XV axial deviation	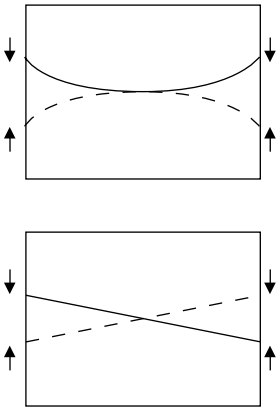		Only when XV (B-Bow) is ± 0.15mm or more, adjust so that LEFT-RIGHT is ± 0.15mm or less with the interlock of B-Bow 4P and CP-ASSY 4P. Adjust so that LEFT+RIGHT is ± 0.15mm or less with XV differential.

2.4.9.2 Adjusting DDCP

(1) Input the timing No. 12 (106.25kHz/85Hz, 1600 x 1200) crosshatch pattern.

(2) Enter the factory mode.

(3) Adjust in the following order. (It is assumed that the center and axial misconvergence on the previous page have already been adjusted.)

Adjustment order	Adjustment item name	Problem	Adjustment point	Adjustment procedure
4H-COIL				
1	HORIZ-CONVERGENCE (BASIC CONVERGENCE HORIZONTAL)	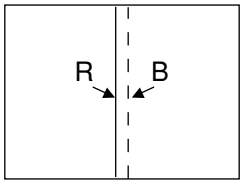	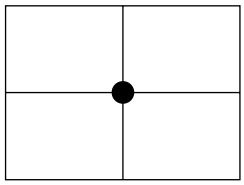	Adjust to 0.05mm or less. (Adjustment target is 0mm.)
2	YH-TT YH-JT	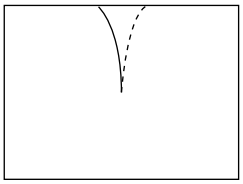 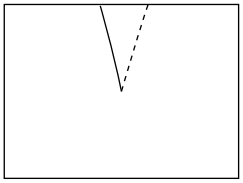	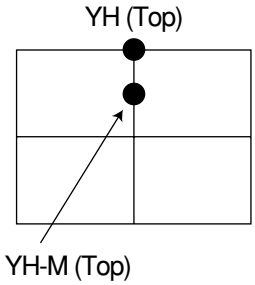	Adjust to 0.05mm or less. (Adjustment target is 0mm.) (NOTE) The operating amount at YH-M(TOP) when moving YH-TT and YH-JT : YH-TT < YH-JT
3	YH-TB YY-JB	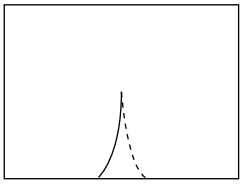 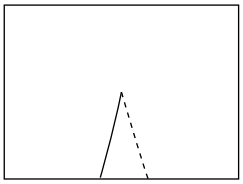	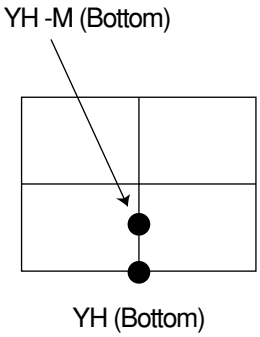	Adjust to 0.05mm or less. (Adjustment target is 0mm.) (NOTE) The operating amount at YH-M (BOTTOM) when moving YH-TB and YH-JB : YH-TB < YH-JB
4	XH-L	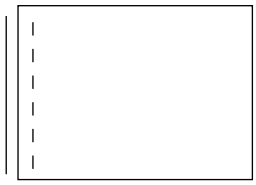	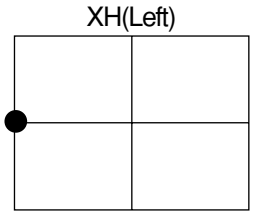	Adjust to 0.1mm or less.
5	XH-R	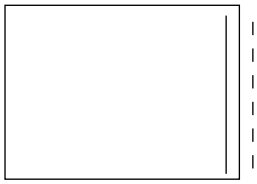	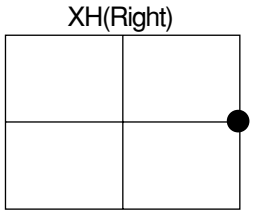	Adjust to 0.1mm or less.

Adjustment order	Adjustment item name	Problem	Adjustment point	Adjustment procedure
4H-COIL				
6	S3H-TL	R B	S3H(TL)	Adjust to 0.3mm or less.
7	S3H-TR		S3H(TR)	Adjust to 0.3mm or less.
8	S3H-BL		S3H(BL)	Adjust to 0.3mm or less.
9	S3H-BR		S3H(BR)	Adjust to 0.3mm or less.
10	PQH-TL	B R	PQH (TL)	Adjust to 0.3mm or less.
11	PQH-TR		PQH (TR)	Adjust to 0.3mm or less.

Adjustment order	Adjustment item name	Problem	Adjustment point	Adjustment procedure
4H-COIL				
12	PQH-BL		PQH (BL)	Adjust to 0.3mm or less.
13	PQH-BR		PQH (BR)	Adjust to 0.3mm or less.

Adjustment order	Adjustment item name	Problem	Adjustment point	Adjustment procedure
4V-COIL				
1	VERT-CONVERGENCE (BASIC CONVERGENCE VERTICAL)	R B		Adjust to 0.05mm or less. (Adjustment target is 0mm.)
2	YV-TT YV-JT		YV (TOP) YV-M (TOP)	Adjust YV (TOP) to 0.05mm or less with balance adjustment of YV-TT and YV-JT. (Adjustment target is 0mm.) (Note) The operating amount at YV-M (TOP) when moving YV-TT and YV-JT. YV-TT<YV-JT
3	YV-TB YV-JB		YV-M (BOTTOM) YV (BOTTOM)	Adjust YV (BOTTOM) to 0.05mm or less with balance adjustment of YV-TB and YV-JB. (Adjustment target is 0mm.) (Note) The operating amount at YV-M (BOTTOM) when moving YV-TB and YV-JB. YV-TB<YV-JB

Adjustment order	Adjustment item name	Problem	Adjustment point	Adjustment procedure
4V-COIL				
4	XV-L		XV(Left)	Adjust to 0.1mm or less.
5	XV-R		XV(Right)	Adjust to 0.1mm or less.
6	S3V-TL	B R	S3V(TL)	Adjust to 0.3mm or less.
7	S3V-TR		S3V(TR)	Adjust to 0.3mm or less.
8	S3V-BL		S3V(BL)	Adjust to 0.3mm or less.
9	S3V-BR		S3V(BR)	Adjust to 0.3mm or less.

Adjustment order	Adjustment item name	Problem	Adjustment point	Adjustment procedure
4V-COIL				
10	PQV-TL	B R	PQV (TL)	Adjust to 0.3mm or less.
11	PQV-TR		PQV (TR)	Adjust to 0.3mm or less.
12	PQV-BL		PQV (BL)	Adjust to 0.3mm or less.
13	PQV-BR		PQV (BR)	Adjust to 0.3mm or less.

* Specify the adjustment value range of the following adjustment items in general DDCP adjustment.

Adjustment items	Adjustment value range (Factory mode)
BASIC CONVERGENCE HORIZONTAL	73~181 (OSM display value=DAC output value)
BASIC CONVERGENCE VERTICAL	73~181 (OSM display value=DAC output value)

2.4.10 Default settings (With factory mode)

Status indicator	Adjustment item	Adjustment mode/set	Imput signal/pattern
	Default settings	Factory mode	Each adjustment timing
			Crosshatch

(1) Set the default values as shown in the table (user mode) given in the OSM display (Refer to 2.3.2.1 User mode).
If the setting class is an item for each timing, carry out for each adjustment timing except the item of default setting "CENTER".

NOTE) As for DESTINATION of FACT 9, "USA" should be set for USA and Canada, and "EUR" should be set for the others.

(2) Return to the user mode with the front panel.

(3) Execute FACTORY RESET to confirm that each OSM setting is as shown in the table (user mode) given in the OSM display (Refer to 2.3.2.1 User mode).
The default setting CENTER is the factory adjustment value called when RESET button is pressed and then PROCEED button is pressed in the normal mode.
Only CONTRAST will be set to 100% when RESET button is pressed and then PROCEED button is pressed in the normal mode.

(4) After setting the default values, turn the power switch OFF.

2.5 Inspections (In normal mode)

Status indicator	Adjustment item	Adjustment mode/set	Imput signal/pattern
	Inspections	Normal mode	

2.5.1 Electrical performance

Inspect the electrical performance by setting contrast to MAX (press RESET button first, and then press PROCEED button) and bright to center (for USA / Canada: press RESET button first, and then press PROCEED button, for the others: select BRIGHTNESS, and press (-) and (+) buttons simultaneously).

2.5.1.1 Withstand voltage

There must be no abnormality when 1500VAC is applied for two seconds between both ends of the AC input terminal and chassis, and between the DG coil terminal and chassis.

NOTE) Cut-off current should be 20mA.

2.5.1.2 Grounding conductivity check

Check that the resistance value is 100mΩ or less when 25A is passed between the AC input terminal grounding GND and chassis GND.

2.5.1.3 Degaussing coil operation

Confirm that when OSM DEGAUSS is executed, the picture vibrates and then stops.

2.5.1.4 POWER SAVE (IPM) function operation (Set the AC power input to 230V)

Confirmation timing
Timing No. 12 (106.25kHz / 85Hz, 1600x1200)

Use the full white pattern without R, G, B signals.
Select IPM from the OSM, and set ENABLE.

(1) POWER SAVE ON

(a) Confirm that when H and V SYNCS are removed, and then the picture dark ens.
Also confirm that Power-On Indicator changes to orange and the power consumption is as follows.

Power consumption	3W or less

(b) Confirm that when SYNC is input again, the high voltage is recovered, and the picture appears in approx. five seconds.

2.5.1.5 Confirming the CORNER-PURITY (GLOBAL SYNC) function

Confirmation timing
Timing No. 12 (106.25kHz / 85Hz, 1600x1200)

Input a full white display, and press (-) / (+) buttons to change the CORNER PURITY (GLOBAL SYNC) (TR / TL /BR / BL). Confirm that the color coordination around the picture changes.

2.5.1.6 Focus, picture performance (Timing No. 12 106.25kHz / 85Hz, 1600 x 1200)

Status indicator	Adjustment item	Adjustment mode/set	Imput signal/pattern
	Focus,		No.12 : 106.25kHz/85Hz, 1600x1200
	picture performance		

The picture must be evenly bright with the "e" character normal and reverse displays.

2.5.1.7 Misconvergence

After heat running for 20 minutes or more, the mis-convergence amount in the horizontal and vertical directions must be below the following values.
The mis-convergence amount is the value between the two colors of R, G and B separated the most in the horizontal (X) and vertical (Y) directions when a 9 vertical line x 9 horizontal line crosshatch is displayed.

Zone	Mis-convergence amount				
A	0.25mm or less				
B	0.35mm or less				
Measurement timing (Timing No.)	12				

<Zone>

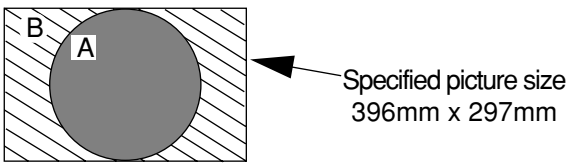

<Mis-convergence amount>

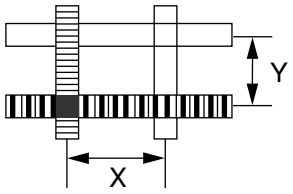

2.5.1.8 Picture distortion

When the picture distortion is measured, each distortion of the preset timing must be less than the following values.

<Picture performance inspection items> Inspect the following items for the picture distortion.

No.	Item	Judgement reference value	Input signal
1.	4-corner section distortion Inspect the distortion at the four corners. • Signal, H character with frame (both normal/reverse) 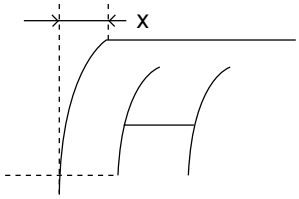 • Distortion x: Distortion in the range of one H character height. Judge with the white display G. (Judge the distortion amount with a fluorescent material stripe.)	x ≦1pitch (=0.3mm)	H character with frame (both normal/ reverse)
2.	4-edge distortion When S-character or seagull type high frequency distortion is visible, check with the following method. 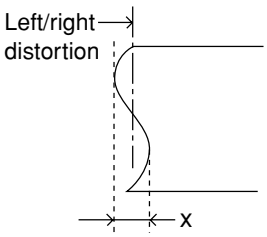 • Distortion x of S-character distortion, etc.: Distortion excluding normal pin, barrel or trapezoid. Note:There must be no sea-gull distortion. 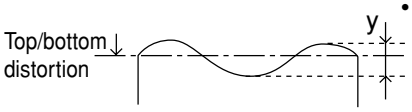 • Distortion y: High frequency distortion excluding trapezoid.	x ≦0.6mm * Note y ≦1.0mm	Crosshatch pattern
3.	Inner distortion 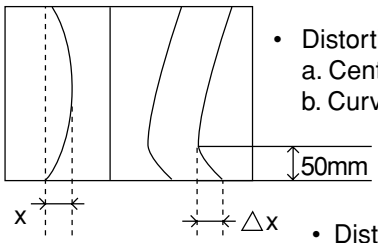 • Distortion x: a. Center line b. Curve of other vertical line • Distortion△x:Curve within 50mm range Vertical line △X measurement method 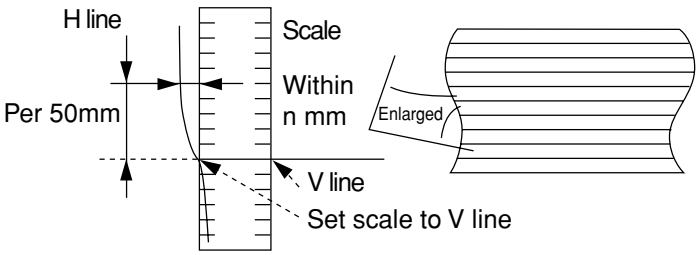 	a. x ≦1.0mm b. x ≦1.5mm (*) (*) Present No. 0 (31.5kHz, 60Hz) is: a. x ≦1.5mm b. x ≦2.0mm △x ≦ 0.9mm	

No.	Item	Judgement reference value	Input signal
4.	Line curve (crosshatch pattern outer contour) △x △y △x: Curve within 50mm range (horizontal) △y: Curve within 50mm range (vertical)	△x ≦1.0mm △y ≦1.0mm	Crosshatch pattern
5.	Horizontal trapezoid (top/bottom), vertical trapezoid (left/right) Bezel y1 y2 x1 x2 • △y=|y1-y2| △x=|x1-x2| • Control with the above right value for each the top, bottom, left and right.	△y ≦2.0mm △x ≦1.8mm	
6.	Top/bottom pin and barrel, left/right pin and barrel △yb △yp △x Picture	△yb ≦1.3mm △yp ≦1.5mm △x ≦1.0mm	
7.	Parallelogram distortion x1 x2 Measure the larger of x1 and x2.	x ≦0.8mm	
8.	Inclination Measure △y = |y1-y2|. y1 y2 Bezel	△y ≦2.0mm	

No.	Item	Judgement reference value	Input signal
9.	Distortion Must be within the following frame. (Note, excluding ROTATION) 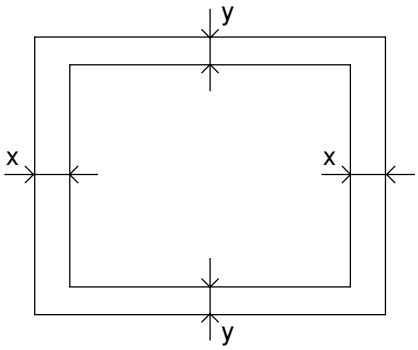 	y ≦ 2.0mm x ≦ 2.0mm	Crosshatch pattern
10.	Picture position Display picture 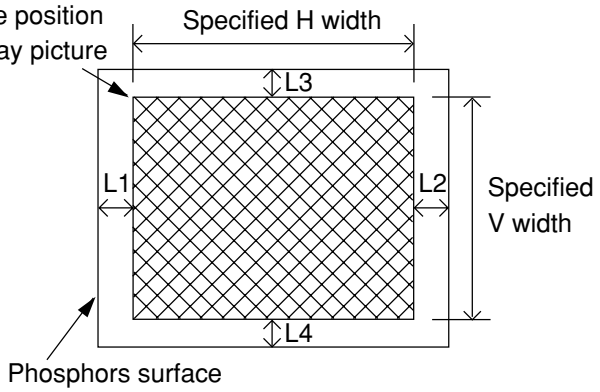 	|L1-L2| ≦ 5.0mm |L3-L4| ≦ 3.0mm	Full white

2.5.1.9 Linearity

Measure the linearity with a 17 horizontal line x 13 vertical line crosshatch.

Horizontal linearity :	fH=30-40kHz	whole : 15% or less,	adjacent : 7% or less
	fH=40-60kHz	whole : 12% or less,	adjacent : 7% or less
	fH=60-121kHz	whole : 10% or less,	adjacent : 7% or less
Vertical linearity :		whole : 10% or less,	adjacent : 7% or less

Calculation expression : $\frac{(Xmax - Xmin)}{(Xmax + Xmin)/2} \times 100(\%)$

* If any doubts arise about the judgment, judge with the horizontal/vertical width tolerance of ±3mm, picture position: |L1-L2|≤3.0mm and |L3-L4|≤3.0mm.

2.5.1.10 Adjustment value list

The horizontal width, vertical width and DBF-H/V amplitude must be within the following ranges.

Timing	Horizontal width (mm)	Vertical width (mm)	DBF-H amplitude (H)		DBF-V amplitude (V)	
No.	Adj. value	Adj. value	Standard Adj. value	Max. Adj. value	Standard Adj. value	Max. Adj. value
1	396(+5/-15)	297(+4/-15)	370 ± 10	430	145 ± 10	190
2	396 ± 5	297 ± 4	370 ± 10	430	145 ± 10	190
3	396(+5/-15)	297(+4/-15)	370 ± 10	430	145 ± 10	190
4						
5	396(+5/-15)	297(+4/-15)	370 ± 10	430	145 ± 10	190
6	396 ± 5	297 ± 4	370 ± 10	430	145 ± 10	190
7	396 ± 5	297 ± 4	370 ± 10	430	145 ± 10	190
8	396 ± 5	297 ± 4	370 ± 10	430	145 ± 10	190
9	371 ± 5	297 ± 4	340 ± 10	400	145 ± 10	190
10	371 ± 5	297 ± 4	340 ± 10	400	145 ± 10	190
11	396 ± 5	297 ± 4	370 ± 10	430	145 ± 10	190
12	396 ± 5	297 ± 4	370 ± 10	430	145 ± 10	190
13						
14						
15	396 ± 5	297 ± 4	370 ± 10	430	145 ± 10	190
16						
17						
18						
19	396 ± 5	297 ± 4	370 ± 10	430	145 ± 10	190
20						
21						
22						
23						
24						
25						
26						
27						
28						

Standard adjustment value: in case of determining DBF voltage
Maximum adjustment value: the value impossible to set the maximum of DBF voltage

2.5.1.11 Checking the functions during Composite Sync input

Status indicator	Adjustment item	Adjustment mode/set	Imput signal/pattern
	Checking the functions during Sync. on Green and Composite Sync input		Check 2 : 35kHz / 66Hz
			Full white

[Composite Sync]
Timing: Check 2 (35kHz/66Hz), full white
In the normal mode, input the above timing to confirm that the operation is normal.

2.5.1.12 Confirming the reset operation

Confirmation timing
Timing No. 12 (106.25kHz / 85Hz, 1600x1200)

Carry out the following confirmation in the NORMAL MODE.
After varying the NARROW / WIDE data somewhat, press RESET button and then press PROCEED button to confirm that the data returns to the original value.

2.5.1.13 Confirming the full white luminance

Status indicator	Adjustment item	Adjustment mode/set	Imput signal/pattern
	Confirming the full white luminance		No.12: 106.25kHz / 85Hz 1600x1200
			Full white

Timing No. 12 (106.25kHz/85Hz, 1600 x 1200), input amplitude = 0.7Vp-p
Confirm that the full white luminance is the following value.

COLOR 1	sRGB	COLOR 5
105 or more	92 or more	77or more

2.5.1.14 Confirming CONVERGENCE compensation function

Confirm that CONVERGENCE changes by varying HORIZONTAL and VERTICAL of BASIC CONVERGENCE.

2.5.1.15 Confirming ROTATION compensation function

Confirm that the picture rorates by changing ROTATION.

2.5.1.16 Luminance/color coordination uniformity

Status indicator	Adjustment item	Adjustment mode/set	Imput signal/pattern
	Lluminance/color coordination uniformity		No.12: 106.25kHz / 85Hz 1600x1200

The luminance ratio between the center and periphery must be 80% or more with timing No. 12 (106.25kHz/85Hz, 1600 x 1200) COLOR 1.
The color coordination difference between the center and periphery must be $\Delta x, y < \pm 0.012$ at COLOR 1 / sRGB / 5.

2.5.1.17 Confirming the full white color coordination

(This adjustment should be done in Factory mode.)

Confirm that the color coordination at the center of the full white is within the following range at the drive signal adjustment timing.

Condirmation item		COLOR 1	sRGB	COLOR 5
Color coordination	x	0.283 ±0.007	0.313 ±0.007	0.345 ±0.007
	y	0.297 ±0.007	0.329 ±0.007	0.359 ±0.007

* Confirmation of OSM color coordination

x=0.283 ± 0.04, y=0.927 ± 0.05 (With white colored section in OSM)

2.5.1.18 Confirming the color tracking

Status indicator	Adjustment item	Adjustment mode/set	Imput signal/pattern
	Confirming color tracking		No.12 : 106.25kHz/85Hz
			Full White

Confirm with the timing No. 12 (106.25kHz/85Hz, 1600 x 1200).

Measure the color coordination at the center of the picture using a full white pattern (input amplitude = 0.7Vp-p).

Confirm that the color coordination change is within the ±0.015 range when the CONTRAST is set to 25cd/m^2 with the OSM.

2.5.1.19 CRT installation position

CRT installation position tolerance Within ± 3mm in vertical direction
Within ± 2.5mm in horizontal direction
Inclination : Within ± 2.5mm at bezel reference

2.5.1.20 Others

(1) When any button is pressed, the changes must be smooth, and there must be no abnormalities such as noise.
(2) Synchronization must not flow when the power switch is turned ON and OFF.
(3) Confirm that the Power-On Indicator is lit.

2.6 DDC write data contents

The contents of DDC write data must be as follows.

-- EDID DATA DUMP TEXT --
Mnuf Code: NEC
Product Code LSB (HEX): B6
Product Code MSB (HEX): 61
(Microsoft INF ID: NEC61B6)
Serial Number (HEX): **
Week of Manuf: WW
Year of Manuf: YY

EDID Version: 1
EDID Revision: 2
Extension Flag: 0

Video:
Input Singal: ANALOG
Setup: NO
Sync on Green: NO
Composite Sync: YES
Separate Sync: YES
V Sync Serration: NO
V Signal Level: 0.700V/0.300V (1V p-p)

Max Image Size H: 40cm
Max Image Size V: 30cm
DPMS Stand By: YES
DPMS Suspend: YES
DPMS Active Off: YES
GTF Support: YES
Standard Default Color Space: NO
Preferred Timing Mode: YES
Display Type: RGB Color

Color:
Gamma: 2.20
Red x: 0.627
Red y: 0.341
Green x: 0.292
Green y: 0.605
Blue x: 0.149
Blue y: 0.072
White x: 0.283
White y: 0.297

Established Timings:
720x400 @70 Hz
720x400 @88 Hz
640x480 @60 Hz
640x480 @67 Hz
640x480 @72 Hz
640x480 @75 Hz
800x600 @56 Hz
800x600 @60 Hz
800x600 @72 Hz
800x600 @75 Hz
832x624 @75 Hz
1024x768 @87 Hz (I)
1024x768 @60 Hz
1024x768 @70 Hz
1024x768 @75 Hz
1152x870 @75 Hz
1280x1024 @75 Hz

Standard Timing #1:
Horizontal Active Pixels: 800
Aspect Ratio: 4:3
(600 active lines)
Refresh Rate: 85Hz

Standard Timing #2:
Horizontal Active Pixels: 1024
Aspect Ratio: 4:3
(768 active lines)
Refresh Rate: 85Hz

Standard Timing #3:
Horizontal Active Pixels: 1152
Aspect Ratio: 4:3
(864 active lines)
Refresh Rate: 75Hz

Standard Timing #4:
Horizontal Active Pixels: 1280
Aspect Ratio: 4:3
(960 active lines)
Refresh Rate: 85Hz

Standard Timing #5:
Horizontal Active Pixels: 1280
Aspect Ratio: 5:4
(1024 active lines)
Refresh Rate: 85Hz

Standard Timing #6:
Horizontal Active Pixels: 1600
Aspect Ratio: 4:3
(1200 active lines)
Refresh Rate: 75Hz

Standard Timing #7:
Horizontal Active Pixels: 1792
Aspect Ratio: 4:3
(1344 active lines)
Refresh Rate: 75Hz

Standard Timing #8:
Horizontal Active Pixels: 1920
Aspect Ratio: 4:3
(1440 active lines)
Refresh Rate: 72Hz

Detailed Timing (block #1):
- Preferred Timing Mode -
Pixel Clock: 229.50 MHz
Horizontal Active: 1600 pixels
Horizontal Blanking: 560 pixels
Vertical Active: 1200 lines
Vertical Blanking: 50 lines
(Horizontal Frequency: 106.25 kHz)
(Vertical Frequency: 85.0 Hz)
Horizontal Sync Offset: 64 pixels
Horizontal Sync Width: 192 pixels
Vertical Sync Offset: 1 lines
Vertical Sync Width: 3 lines
Horizontal Border: 0 pixels
Vertical Border: 0 pixels
Horizontal Image Size: 396 mm
Vertical Image Size: 297 mm
Interlaced: NO
Image: Normal Display
Sync: Digital Separate
Bit 1: ON
Bit 2: ON

Monitor Range Limits (block #2):
Minimum Vertical Rate: 50 Hz
Maximum Vertical Rate: 160 Hz
Minimum Horizontal Rate: 30 kHz
Maximum Horizontal Rate: 110 kHz
Maximum Pixel Clock: 330 MHz
GTF Data: 00 0a 20 20 20 20 20 20

Monitor Name (block #3): NEC FE1250+

Monitor Serial Number (block #4): ##

EDID EDITOR V1.40 (000621)
(C) Mitsubishi Electric 1995-2000

EDID DATA DUMP HEX

00	ff	ff	ff	ff	ff	ff	00
38	a3	b6	61	**	**	**	**
WW	YY	01	02	0c	28	1e	78
eb	9c	68	a0	57	4a	9b	26
12	48	4c	ff	ff	80	45	59
61	59	71	4f	81	59	81	99
a9	4f	c1	4f	d1	4c	a6	59
40	30	62	b0	32	40	40	c0
13	00	8c	29	11	00	00	1e
00	00	00	fd	00	32	a0	1e
6e	21	00	0a	20	20	20	20
20	20	00	00	00	fc	00	4e
45	43	20	46	45	31	32	35
30	2b	0a	20	00	00	00	ff
00	##	##	##	##	##	##	##
##	##	0a	20	20	20	00	SS

** : Serial Number (HEX)
WW : Week of Manuf
YY : Year of Manuf
: Serial Number (ASCII)
SS : Check SUM

2.7 Self-diagnosis shipment setting

Self-diagnosis data area

ADR	Shipment Setting (H)	LABEL NAME
0x0C9	0x00	Lower byte of operating time (excluding POWER SAVE)
0x0CA	0x00	Lower byte of operating time (excluding POWER SAVE)
0x0CB	0x00	Middle byte of operating time (excluding POWER SAVE)
0x0CC	0x00	Upper byte of operating time (excluding POWER SAVE)
0x0CD	0x00	Lower byte of operating time
0x0CE	0x00	Upper byte of operating time
0x761	0x00	Upper 4 bit: High voltage error rate at User mode, Lower 4 bit: Short-circuit rate at User mode
0x762	0x00	Upper 4 bit: I2C bus error rate at User mode, Lower 4 bit: Beam error rate at User mode
0x763	0x00	Upper 4 bit: Heater error rate at User mode, Lower 4 bit: EEPROM error rate at User mode
0x764	0x00	Upper 4 bit: High voltage error rate at Factory mode, Lower 4 bit: Short circuit rate at Factory mode
0x765	0x00	Upper 4 bit: I2C bus error rate at Factory mode, Lower 4 bit: Beam error rate at Factory mode
0x766	0x00	Upper 4 bit: Heater error rate at Factory mode, Lower 4 bit: EEPROM error rate at Factory mode

2.8 Default inspection

2.8.1 Default setting of switches

Confirm that the following switch is set as follows.

(1) Power button: OFF

2.8.2 Default setting of OSM

Confirm that each OSM setting is as shown in the OSM display (section 2.3.2) table (user mode/factory mode).

If the setting class is an item for each timing, carry out for each adjustment timing.

* CENTER is the factory adjustment value called when RESET button is pressed in the normal mode.

Only CONTRAST will be set to MAX when RESET button is pressed in the normal mode.

NOTE) BRIGHTNESS CENTER is at the following position.

for USA / Canada: adjustment bar is at the approx. center

for the others: adjustment bar is at the approx. 1/4

2.8.3 Checking the labels

Confirm that the "SERVICEMAN WARNING", "rating label", "manufacturing date stamp", "SERIAL NO. label", and "set sub-No.", etc., are attached to the specified position, and have been checked.

2.8.4 Packaging

(1) There must be no remarkable contamination, tearing or scratches, etc.

(2) The model name must be accurately displayed.

(3) The SERIAL NO. must be attached. (Must be the same No. as the set.)

(4) The package must be accurately sealed.

2.9 Degaussing with handy-demagnetizer

2.9.1 General precautions

(1) Carry this procedure out with the monitor power ON.
(2) When degaussing with handy-demagnetizer, the demagnetizer power must be turned ON and OFF at a position at least 1m away from CRT tube.
(3) Use a bar type demagnetizer instead of a ring type.
Carefully and slowly (1m/3 sec.) demagnetize the CRT tube and bezel side surface.
When separating the degaussing coil at the end, separate as slow as possible with the following procedure.
If separated quickly, stripes could remain at the picture corners.

2.9.2 How to hold and use the handy-demagnetizer

(1) Approach the demagnetizer as carefully and slowly (approx. 1m/3 sec.) as possible, and move around the bezel side periphery two to three times.
(2) Next, gradually (approx. 1m/3 sec.) move to the CRT tube side, and move around the CRT tube four to five times with the following procedure.
(3) Finally, leave the CRT tube as slowly (approx. 1m/3 sec.) as possible, and turn the handy-demagnetizer unit switch OFF at a position 1 to 1.5m away.

(NOTE): The monitor should be degaussed as whichever following conditions.
(1) Degauss by handy demagnetizer in off condition.
(2) Degauss by handy demagnetizer in power management condition.
(3) Degauss by handy demagnetizer with monitor set degauss operation.

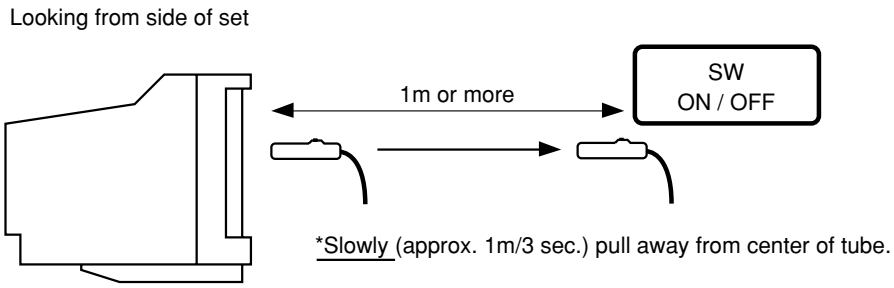

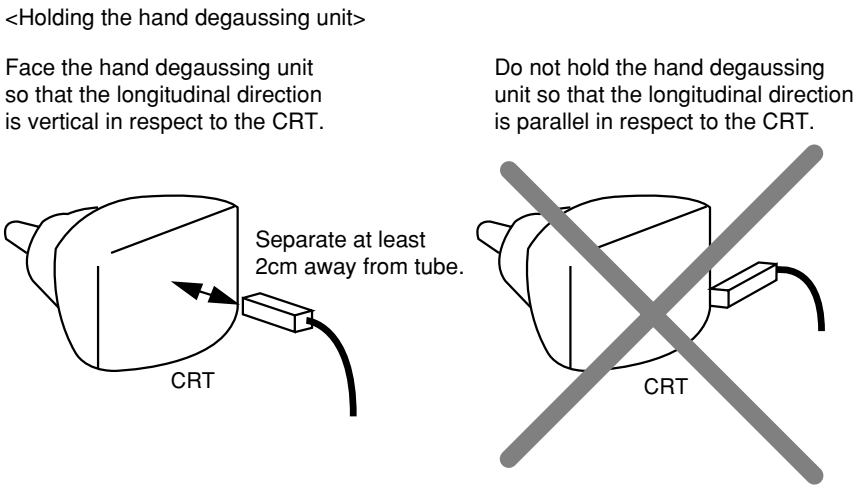

2.10 Caution

Do not input the user timing before factory adjustments.
(The automatic tracking of the FOCUS could be adversely affected.)

2.11 Timing chart

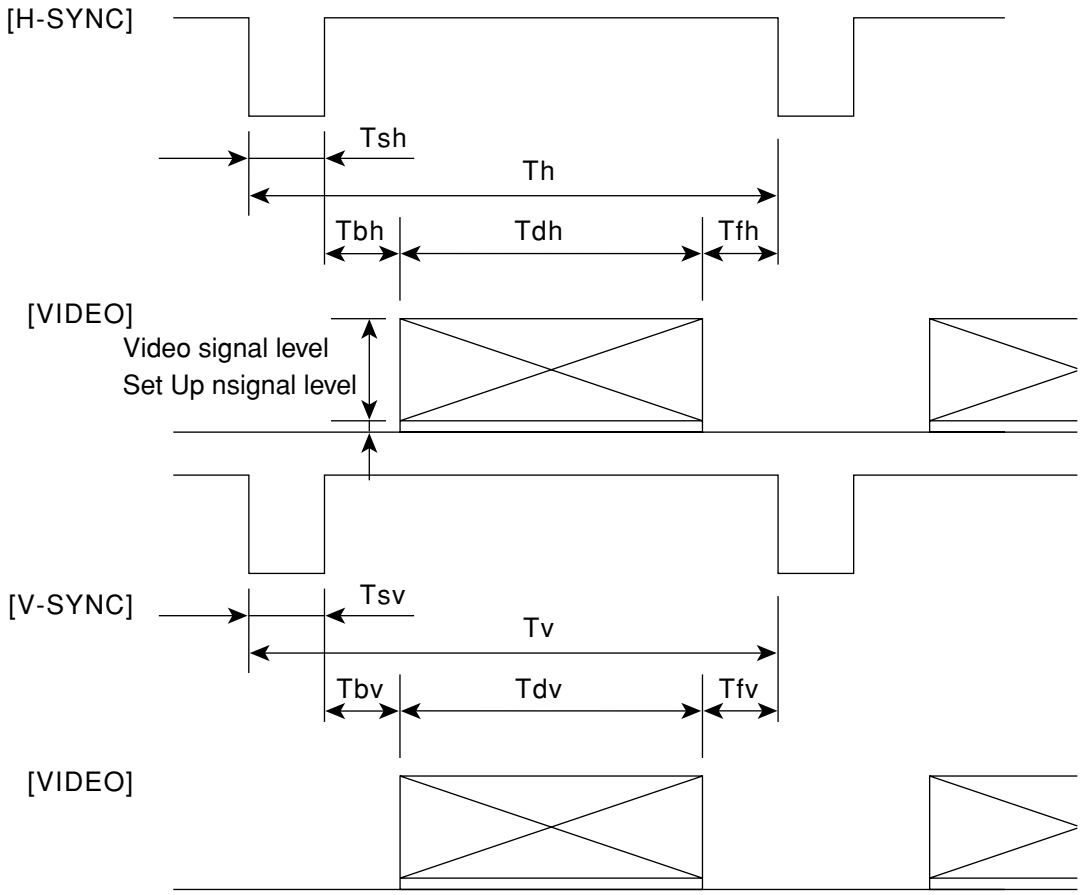

*Refer to after the next page for the preset timing details.

2.12 Adjustment timing

NO	Fh (kHz)	Clock (MHz)	Th (µSEC) (dot)	Tsh (µSEC) (dot)	Tfh (µSEC) (dot)	Tbh (µSEC) (dot)	Tdh (µSEC) (dot)	Fv (Hz)	Tv (mSEC) (line)	Tsv (mSEC) (line)	Tfv (mSEC) (line)	Tbv (mSEC) (line)	Tdv (mSEC) (line)	Hs	Vs	VIDEO level (V)	set up level (V)	Serra-tion			Remarks
Check 1	35		28.571	3.500	1.891	4.000	19.180	66.70	15.000	0.086	1.485	2.000	11.428	S/G		0.7	-	-			Check 1
Check 2	35		28.571	3.500	1.891	4.000	19.180	66.70	15.000	0.086	1.485	2.000	11.428	Com posite		0.7	-	1H			Check 2
Check 3	114.240	252.242	8.754	0.698	0.507	1.205	6.343	85.000	11.765	0.026	0.009	0.525	11.204	-	-	0.7	-	-			Check 3 GTF(1600*1280)85Hz
Check 4	106.250	229.500	9.412	0.837	0.279	1.325	6.972	85.000	11.765	0.028	0.009	0.433	11.294	+	-	0.7	-	-			Check 4 (1600*1200)85Hz
A	30		33.333	4.000	0.833	2.500	26.000	70.10	14.268	0.064	1.176	1.906	11.122	+	-	0.7	-	-			+B-L adjustment

NO	Fh (kHz)	Clock (MHz)	Th (μSEC) (dot)	Tsh (μSEC) (dot)	Tfh (μSEC) (dot)	Tbh (μSEC) (dot)	Tdh (μSEC) (dot)	Utili-zation	H re-trace s+f+b	Fv (Hz)	Tv (mSEC) (line)	Tsv (mSEC) (line)	Tfv (mSEC) (line)	Tbv (mSEC) (line)	Tdv (mSEC) (line)	V re-trace	Hs	Vs	VIDEO level (V)	Set up level (V)	Serra-tion (V)					Remarks
1	31.470	28.322	31.777 (900)	3.813 (108)	0.635 (18)	1.907 (54)	25.422 (720)	80.00	6.355	70.090	14.268 (449)	0.064 (2)	0.381 (12)	1.112 (35)	12.711 (400)	1.557	-	+	0.7	-	-	■10				DOS(720*400)70Hz
2	31.469	25.175	31.778 (800)	3.813 (96)	0.636 (16)	1.907 (48)	25.422 (640)	80.00	6.356	59.940	16.683 (525)	0.064 (2)	0.318 (10)	1.048 (33)	15.253 (480)	1.112	-	-	0.7	-	-	○1				VGA(640*480)60Hz
3	37.500	31.500	26.667 (840)	2.032 (64)	0.508 (16)	3.810 (120)	20.317 (640)	76.19	6.350	75.000	13.333 (500)	0.080 (3)	0.027 (1)	0.427 (16)	12.800 (480)	0.506	-	-	0.7	-	-	■11				VESA(640*480)75Hz
4	43.269	36.000	23.111 (832)	1.556 (56)	1.556 (56)	2.222 (80)	17.778 (640)	76.92	5.334	85.008	11.764 (509)	0.069 (3)	0.023 (1)	0.578 (25)	11.093 (480)	0.647	-	-	0.7	-	-					VESA(640*480)85Hz
5	46.875	49.500	21.333 (1056)	1.616 (80)	0.323 (16)	3.232 (160)	16.162 (800)	75.76	5.171	75.000	13.333 (625)	0.064 (3)	0.021 (1)	0.448 (21)	12.800 (600)	0.512	+	+	0.7	-	-	■12				VESA(800*600)75Hz
6	53.674	56.250	18.631 (1048)	1.138 (64)	0.569 (32)	2.702 (152)	14.222 (800)	76.34	4.409	85.061	11.756 (631)	0.056 (3)	0.019 (1)	0.503 (27)	11.179 (600)	0.559	+	+	0.7	-	-	○2				VESA(800*600)85Hz
7	60.023	78.750	16.660 (1312)	1.219 (96)	0.203 (16)	2.235 (176)	13.003 (1024)	78.05	3.657	75.029	13.328 (800)	0.050 (3)	0.017 (1)	0.466 (28)	12.795 (768)	0.516	+	+	0.7	-	-	○3				VESA(1024*768)75Hz
8	68.677	94.500	14.561 (1376)	1.016 (96)	0.508 (48)	2.201 (208)	10.836 (1024)	74.42	3.725	84.997	11.765 (808)	0.044 (3)	0.015 (1)	0.524 (36)	11.183 (768)	0.568	+	+	0.7	-	-	○4				VESA(1024*768)85Hz
9	79.976	135.000	12.504 (1688)	1.067 (144)	0.119 (16)	1.837 (248)	9.481 (1280)	75.82	3.023	75.025	13.329 (1066)	0.038 (3)	0.013 (1)	0.475 (38)	12.804 (1024)	0.513	+	+	0.7	-	-	○5				VESA(1280*1024)75Hz
10	91.146	157.500	10.971 (1728)	1.016 (160)	0.406 (64)	1.422 (224)	8.127 (1280)	74.08	2.844	85.027	11.761 (1072)	0.033 (3)	0.011 (1)	0.483 (44)	11.235 (1024)	0.516	+	+	0.7	-	-	○6				VESA(1280*1024)85Hz
11	93.750	202.500	10.667 (2160)	0.948 (192)	0.316 (64)	1.501 (304)	7.901 (1600)	74.07	2.765	75.000	13.333 (1250)	0.032 (3)	0.011 (1)	0.491 (46)	12.800 (1200)	0.523	+	+	0.7	-	-	○7				VESA(1600*1200)75Hz
12	106.250	229.500	9.412 (2160)	0.837 (192)	0.279 (64)	1.325 (304)	6.972 (1600)	74.08	2.441	85.000	11.765 (1250)	0.028 (3)	0.009 (1)	0.433 (46)	11.294 (1200)	0.461	+	+	0.7	-	-	○8				VESA(1600*1200)85Hz
13	106.270	261.000	9.41 (2456)	0.828 (216)	0.368 (96)	1.349 (352)	6.866 (1792)	72.96	2.545	74.997	13.334 (1417)	0.028 (3)	0.009 (1)	0.649 (69)	12.647 (1344)	0.677	-	+	0.7	-	-					VESA(1792*1344)75Hz
14	112.500	288.000	8.889 (2560)	0.778 (224)	0.444 (128)	1.222 (352)	6.444 (1856)	72.49	2.444	75.000	13.333 (1500)	0.027 (3)	0.009 (1)	0.924 (104)	12.373 (1392)	0.951	-	+	0.7	-	-					VESA(1856*1392)75Hz
15	112.500	297.000	8.889 (2640)	0.754 (224)	0.485 (144)	1.185 (352)	6.465 (1920)	72.73	2.424	75.000	13.333 (1500)	0.027 (3)	0.009 (1)	0.498 (56)	12.800 (1440)	0.525	-	+	0.7	-	-					VESA(1920*1440)75Hz
16	35.00	30.240	28.571 (864)	2.116 (64)	2.116 (64)	3.175 (96)	21.164 (640)	74.08	7.407	66.67	15.000 (525)	0.086 (3)	0.086 (3)	1.114 (39)	13.714 (480)	1.2	-	-	0.7	-	-					APPLE13(640*480)
17	49.710	57.270	20.115 (1152)	1.118 (64)	0.559 (32)	3.910 (224)	14.528 (832)	72.22	5.587	74.530	13.417 (667)	0.060 (3)	0.020 (1)	0.785 (39)	12.552 (624)	0.845	-	-	0.7	-	-					APPLE16(832*624)
18	60.240	80.000	16.600 (1328)	1.200 (96)	0.400 (32)	2.200 (176)	12.800 (1024)	77.11	3.800	74.930	13.346 (804)	0.050 (3)	0.049 (3)	0.498 (30)	12.749 (768)	0.548	-	-	0.7	-	-					APPLE19(1024*768)
19	68.680	100.000	14.560 (1456)	1.280 (128)	0.320 (32)	1.440 (144)	11.520 (1152)	79.12	3.040	75.060	13.322 (915)	0.044 (3)	0.043 (3)	0.568 (39)	12.667 (870)	0.612	-	-	0.7	-	-	○9				APPLE21(1152*870)
20	100.200	219.638	9.980 (2192)	0.801 (176)	0.546 (120)	1.348 (296)	7.285 (1600)	73.00	2.695	75.000	13.333 (1336)	0.03 (3)	0.01 (1)	0.519 (52)	12.774 (1280)	0.549	-	-	0.7	-	-					GTF(1600*1280)75Hz
21	107.200	234.982	9.328 (2192)	0.749 (176)	0.511 (120)	1.260 (296)	6.809 (1600)	73.00	2.520	80.000	12.5 (1340)	0.028 (3)	0.009 (1)	0.522 (56)	11.94 (1280)	0.55	-	-	0.7	-	-					GTF(1600*1280)80Hz
22	114.240	252.242	8.754 (2208)	0.698 (176)	0.507 (128)	1.205 (304)	6.343 (1600)	72.46	2.410	85.000	11.765 (1344)	0.026 (3)	0.009 (1)	0.525 (60)	11.204 (1280)	0.551	-	-	0.7	-	-					GTF(1600*1280)85Hz
23	105.675	261.229	9.463 (2472)	0.766 (200)	0.521 (136)	1.286 (336)	6.891 (1800)	72.82	2.573	75.000	13.333 (1409)	0.028 (3)	0.009 (1)	0.52 (55)	12.775 (1350)	0.548	-	-	0.7	-	-					GTF(1800*1350)75Hz
24	113.040	279.435	8.846 (2472)	0.716 (200)	0.487 (136)	1.202 (336)	6.442 (1800)	72.82	2.405	80.000	12.5 (1413)	0.027 (3)	0.009 (1)	0.522 (59)	11.943 (1350)	0.549	-	-	0.7	-	-					GTF(1800*1350)80Hz
25	120.445	299.667	8.303 (2488)	0.667 (200)	0.481 (144)	1.148 (344)	6.007 (1800)	72.35	2.296	85.000	11.765 (1417)	0.025 (3)	0.008 (1)	0.523 (63)	11.208 (1350)	0.548	-	-	0.7	-	-					GTF(1800*1350)85Hz
26	112.725	278.656	8.871 (2472)	0.718 (200)	0.488 (136)	1.206 (336)	6.460 (1800)	72.82	2.412	75.000	13.333 (1503)	0.027 (3)	0.009 (1)	0.523 (59)	12.774 (1440)	0.55	-	-	0.7	-	-					GTF(1800*1440)75Hz
27	120.560	299.953	8.295 (2488)	0.667 (200)	0.480 (144)	1.147 (344)	6.001 (1800)	72.34	2.294	80.000	12.5 (1507)	0.025 (3)	0.008 (1)	0.523 (63)	11.944 (1440)	0.548	-	-	0.7	-	-					GTF(1800*1440)80Hz
28	80.530	105.656	12.418 (1312)	1.060 (112)	0.303 (32)	1.363 (144)	9.692 (1024)	78.05	2.726	100.000	10.0 (805)	0.037 (3)	0.012 (1)	0.410 (33)	9.537 (768)	0.463	-	-	0.7	-	-					ELSA(1024*768)100Hz

Mark ○ : Factory adjustment
Mark ■ : Factory adjustment (Though they are presets, only the adjustment data is input. In addition, it does not apply to the specification of the picture distortion, etc.)
The numbers after the marks are the number of preset.

SERIAL NUMBER INFORMATION

Refer to the serial number information shown below.

Ex.) Rating label

Model name: FE1250+
Model NO.: NSV1117STTKW

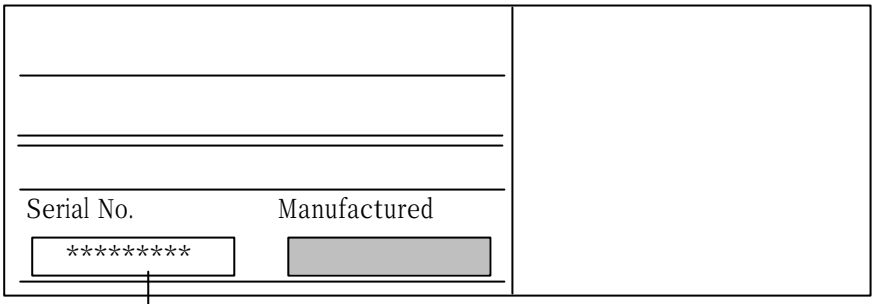

8 09 0 00001

Manufactured Year: 0 to 9
(Last digit)

Manufactured Month: 01 to 12

Control Code: 0 to 9 or A to Z
(It is possible to use fixed no. for same destination if model name is same.)

Running No.: 00001 to 99999

NEC/MITSUBISHI
NEC-MITSUBISHI ELECTRIC VISUAL SYSTEMS

TECHNICAL SPECIFICATION

FOR

55cm/51cmV (22"/20"V) HIGH RESOLUTION DIGITAL CONTROL AUTO-TRACKING COLOR DISPLAY MONITOR

MODEL NAME: FE1250+
(NSV1117STTKW)

DATE : Jan 26, 2000

Drawn by

Checked by

NEC-MITSUBISHI ELECTRIC VISUAL SYSTEMS CORPORATION

DOCUMENT No.	VSP-C0462

REVISE	

TABLE OF CONTENTS

1. Foreword
   1.1 General Description(Quick Reference)
   1.2 Regulations
2. CRT Specifications
3. Electric Specifications
   3.1 Deflections
   3.2 Signal Input
   3.3 Video performance
   3.4 Power Supply
   3.5 Power Saving
   3.6 Degaussing
4. Functions
   4.1 Front Controls
   4.2 OSD (On Screen Display) Functions
   4.3 Back Panel
   4.4 Connector Pin Assignment
   4.5 DDC (Display Data Channel) Functions
   4.6 Preset Timing
5. Display Quality
   5.1 Test Conditions
   5.2 Display size
   5.3 Luminance
   5.4 Color
   5.5 Distortion
   5.6 Linearity
   5.7 Misconvergence
   5.8 Focus
   5.9 Raster Regulation
6. Mechanical Specifications
   6.1 Cabinet, Tilt / Swivel Base
   6.2 Rating Label
   6.3 Carton Box
   6.4 Weight
   6.5 Accessories

7. Environmental Conditions
7.1 Temperature, Relative Humidity & Altitude
7.2 Vibration Test (with carton box)
7.3 Drop Test (with carton box)

Appendix 1 Preset Timing Chart
Appendix 2 EDID data for VESA DDC

Fig.1 Outline
Fig.2 Bezel Logo
Fig.3 Rating Label
Fig.4 Carton Box
Fig.5-1 Printing Specification of Carton Box(North America)
Fig.5-2 Printing Specification of Carton Box(Europe)
Fig.6 Packing Style
Fig.7-1 AC Power Cord for North America
Fig.7-2 AC Power Cord for Except U.K.
Fig.7-3 AC Power Cord for U.K.
Fig.8 Signal Cable (SC - B110)

• **Design and specifications are subject to change without any notice**

1. Foreword

1.1 General Description(Quick Reference)

NO.	TYPE			NM VISUAL STANDARD	REMARKS
1	CRT	Size		55cm / 51cmV (22" / 20"V)	Diamondtron NF
		Grill Spacing(Phosphor Spacing)		0.24mm (0.25mm)	Aperture Grille
		Phosphor Type		B22 (EBU)	
		Face-plate		G-WARAS	
		Electron Gun Type		S-NX-DBF	
		Face-plate Transmission		38.4 %(Including face-plate coating)	
2	SCANNING	Horizontal Freq.		30k - 110kHz	
		Vertical Freq.		50 - 160Hz	
3	SIGNAL INPUT	Video		Analog	0.7Vp-p
		Sync.		Composite Sync.	TTL Nega
				Separate Sync.	TTL Posi / Nega
		Termination (Impedance)	Video	75 Ω to Ground	
			Sync.	2.2k Ω to Ground	
4	VIDEO	clock frequency		180MHz	
5	SCREEN CHARACTERISTICS	Display Resolution		1920 x 1440(Maximum Resolution) 1600 x 1200(Recommended Resolution)	addressable
		Display size	Horizontal	396mm	
			Vertical	297mm	
		Misconvergence		Center : 0.25 mm , Corner : 0.35 mm	
		Brightness (Full White)		100cd/m^2 at 9300K (Back Raster Luminance : Approx. 0.3cd/m^2)	
6	CONTROL (User Controls)	Front		Power SW, EXIT Button, Item Select Buttons, Function Adjust Buttons,Proceed Button,Reset Button	
			OSD	Brightness,Contrast,Degauss,Left/Right,Down/Up, Narrow/Wide,Short/Tall,Color Control,In/Out, Left/Right,Tilt,Align,Rotate,Moire Canceler, Basic Convergence(Horizontal,Vertical), Corner Correction(Top,Top-Balance,Bottom, Bottom-Balance),Linearity(Vertical, Vertical-Balance),Globalsync(Top Left,Top Right, Bottom Left,Bottom Right),Auto Save,Factory Preset, Language,Osd Position,Osm Turn Off,Osd lock Out, IPM,Edge Lock,Display Mode,Monitor Info, Refresh Notifier	
7	CONNECTOR	Power Input		3P IEC Plug	Auto-select
		Signal Input		DB9 - 15P	
8	POWER SUPPLY	Operating range		AC100 - 120V / 220 - 240V , 50 / 60 Hz	
		Power consumption (typ.)		130 W 1.30A@100-120VAC 0.60A@220-240VAC Power Save:≤3W	
9	ENVIRONMENTAL CONDITION	Operating temperature		5 - 35˚C	
		Relative humidity		10 - 90% (without condensation)	
10	WEIGHT			approx. 29.7kg (65.5lbs)	
11	CABINET	with Tilt / Swivel stand		NM Visual standard	
12	REGULATION	Safety		UL / C-UL TÜV (GS)	
		EMC		FCC-B CE-MarkingEN60950 EN55022 - B DOC-B EN55024 EN61000 - 3 - 2, - 3 - 3	
		X - Ray		DHHS RöV HWC	
		VLF / ELF		MPR - II , TCO91	
		Power Management		International Energy Star Program , Energy2000	
		Ergonomics		TCO99 , TÜV (GS) , TÜV-Ergo	
13	OTHERS	Plug & Play		DDC2B , 2Bi	
		Digital Dynamic Convergence			
		Communication		Asset Management	

1.2 Geographical Region and Regulations

MODEL NAME	REGULATIONS						
	SAFETY	EMC	X-RAY	ELF/VLF	Power Management	Ergonomics	Miscellaneous
FE1250+ (NSV1117STTKW)	UL C-UL TÜV-GS	FCC-B DOC-B EN55022-B EN55024 EN61000-3-2 EN61000-3-3 VCCI - B JPHG	DHHS HWC RöV	MPR-II TCO'91	Energy Star Energy2000	TÜV-GS TÜV-Ergo	TCO'99 CE Marking

UL	: UL1950 3rd Edition
C-UL	: CAN/CSA-C22.2 NO.950:1995
TÜV-GS	: EN60950 : 1992 & AD1/AD2/AD3/AD4/AD11 & ISO9241-3,-7and-8
FCC	: 47 CFR Part15 Subpart B, Class B
DOC	: Interference-Causing Equipment Standard ICES-003 Issue 3, Class B
DHHS	: 21CFR Chapter I Subchapter J
HWC	: Radiation Emitting Devices Regulations Chapter 1370
RÖV	: RÖV Vom 8.1. 1987
MPR-II	: MPR 1990:8
TCO'99	: Requirements for environmental labeling of personal computers (First Edition)
CE-Marking	: EN60950:1992 & AD1/AD2/AD3/AD4/AD11 EN55022:1998 Class B EN55024:1998 EN61000-3-2 : 1995 & AD1/AD2 EN61000-3-3 : 1995
Energy Star	: International Energy Star office Equipment Program
VCCI	: Guide to membership of Voluntary Control Council for Interference by data Processing Equipment and Electronic Office Machines , Class B .
JPHG (Japan Power Harmonics Guidelines)	: Guidelines for the suppression of Harmonics in Appliances and General - Use Equipment
Energy2000	: Award Criteria for the Energy Label : 1999
TÜV-Ergo	: EN 50279 2 PfG1041/11.99 ISO 9241-3:1992 ISO 9241-7:1998 ISO 9241-8:1997

2. CRT Specifications

CRT model no.	M51LRY32X61
Type	Diamondtron NF (Aperture Grille)
Size	55cm / 51cm Diagonal View able Image (22" /20" Diagonal View able Image)
Grille Spacing	0.24mm
Phosphor Spacing	0.25mm
Deflection Angle	90 degree
Phosphor Type	B22 (Medium short persistence)
Electron Gun Type	S-NX-DBF
Face-plate Transmission	Approx. 38.4% (Include Face-plate coating)
Face-plate	G-WARAS Coating (Anti-reflection,Anti-glare and Anti-static)
Screen Phosphor Area	406.1 x 304.6 mm
Face-plate Curvature	H: R= 50000 mm , V: R= 80000 mm
Phosphor Color Coordinate	R: X=0.627 , Y=0.341 G: X=0.292 , Y=0.605 (Typical) B: X=0.149 , Y=0.072

3.Electric Specifications

3.1 Deflections

Horizontal	Scanning Frequency	30 - 110kHz
	Back Porch	≥1.1 µsec
	Blanking	≥ 2.3 µsec
	H-sync Width	≥ 0.6 µsec
Vertical	Scanning frequency	50 - 160Hz
	V-sync + V-back Porch	≥ 450 µsec
	V-sync Width	3H ≤ Vs ≤ 10H---over 50kHz (fh) 2H ≤ Vs ≤ 10H---up to 50kHz (fh)
	V-Total Line	≥ 256H + V-sync Width

(*) Full screen adjustment may not be available for the timing which
Tdh / Th < 72% - Over 100kHz (fh)
Tdh / Th < 74% - Up to 100kHz (fh)
Tdh : Horizontal Display Time
Th : Horizontal Scanning Time

3.2 Signal Input

Video Input Signal	R.G.B analog
Sync. Input Signal	External composite sync. , Negative TTL External HD/VD separate sync. TTL (N or P)
Video Input Impedance	75Ω to ground
Sync. Input Impedance	2.2kΩ to ground
Signal Level	Video signal : 0.7V p-p + 10% / - 5% Separate H/V-sync. : TTL level (>2.5V)

3.3 Video Performance

Video Clock Frequency	180MHz
Pulse Rise and Fall time	5.5nsec(typ.) 10 to 90% at 35Vp-p

•The rise and fall time of the input video signal is 2.0nsec or less.
•The pulse rise or fall time is determined using the formula :

$$Ta = \sqrt{Tm^2 - (Ts^2 + Tp^2 + Tsc^2)}$$

Where : Ta = Amplifier rise / fall time
Tm = Measured rise / fall time
Ts = Input signal rise / fall time
Tp = Probe effect on rise / fall time = 2.2 x Rl x Cp
Rl = Amplifier output resistance (ohm)
Cp = Total probe capacitance (F)
Tsc = Scope rise / fall time = 0.35 / Scope bandwidth (MHz)

3.4 Power Supply

Input Voltage	100 - 120 / 220 - 240 VAC ± 10%
Frequency	50/60Hz ± 3Hz
Power Consumption (typ.)	130W 1.30A@100-120VAC 0.60A@220-240VAC
AC leakage current	≤ 3.5mA
Inrush current	≤ 70A 0-peak at 240VAC on cold starting

3.5 Power Saving

	H-sync	V-sync	Video	Power Consumption	Recovery Time	LED Indicator
Power Saving OFF	On	On	Active	130W	-	Green
Power Saving ON	Off	On	Blank	≤ 3W	5 sec	Orange
	On	Off	Blank			
	Off	Off	Blank			

3.6 Degaussing

Auto Degaussing	The monitor have an automatic degaussing function which activates when the unit is turned on.
Manual Degaussing	This activates degaussing at the user's discretion after the unit is operating.

•The Monitor requires minimum 15 minutes after last degauss operation for full degauss capability.

4.Functions

4.1 Front Controls

a : POWER SWITCH
b : POWER-ON INDICATOR
c : EXIT BUTTON
d : ITEM SELECT BUTTONS
e : FUNCTION ADJUST BUTTONS
f : PROCEED BUTTON
g : RESET BUTTON

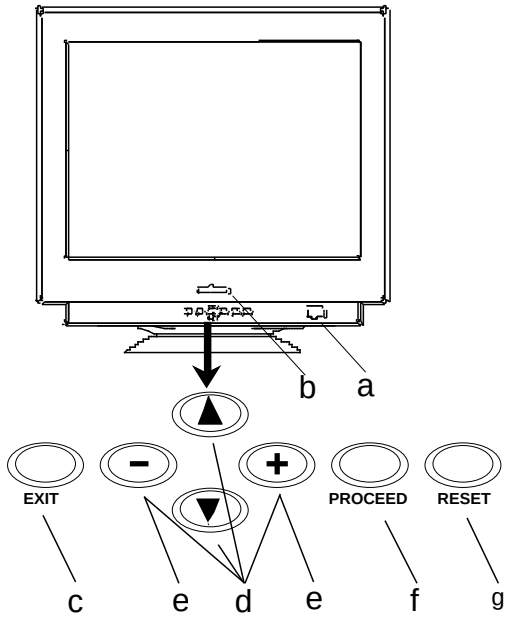

4.2 OSD(On Screen Display) Function

OSD1 Group			default
BRIGHTNESS		BAR	adjusted
CONTRAST		BAR	adjusted
DEGAUSS		PROCEED	-
OSD2 Group			**default**
LEFT / RIGHT		BAR	adjusted
DOWN / UP		BAR	adjusted
NARROW / WIDE		BAR	adjusted
SHORT / TALL		BAR	adjusted
OSD3 Group			**default**
COLOR CONTROL		1:9300K	1:9300K
		2:8200K	
		3:7500K	
		sRGB	
		5:5000K	
OSD4 Group			**default**
IN / OUT		BAR	adjusted
LEFT / RIGHT		BAR	adjusted
TILT		BAR	adjusted
ALIGN		BAR	adjusted
ROTATE		BAR	adjusted
OSD5 Group			**default**
MOIRE CANCELER		BAR	(OFF)
Basic Convergence	Horizontal	BAR	adjusted
	Vertical	BAR	adjusted
Corner Correction	TOP	BAR	adjusted
	TOP-BALANCE	BAR	adjusted
	BOTTOM	BAR	adjusted
	BOTTOM-BALANCE	BAR	adjusted
Linearity	VERTICAL	BAR	adjusted
	VERTICAL-BALANCE	BAR	adjusted

GLOBAL SYNC	TOP LEFT	BAR	adjusted
	TOP RIGHT	BAR	adjusted
	BOTTOM LEFT	BAR	adjusted
	BOTTOM RIGHT	BAR	adjusted
AUTO SAVE		ON / OFF	ON
FACTORY PRESET		PROCEED	-
OSD6 Group			**default**
LANGUAGE		ENG/GER FRA/ESP ITA/SWE	ENG
OSD POSITION		CENTER	CENTER
		TOP LEFT	
		TOP RIGHT	
		BOTTOM LEFT	
		BOTTOM RIGHT	
OSM TURN OFF		10 SECONDS	45 SECONDS
		20 SECONDS	
		30 SECONDS	
		45 SECONDS	
		50 SECONDS	
		120 SECONDS	
OSM LOCK OUT		-	-
IPM		ENABLE	ENABLE
		DISABLE	
EDGE LOCK		1 / 2	1
OSD7 Group			**default**
DISPLAY MODE		Preset Information	
		Horizontal Frequency	
		Vertical Frequency	
		POLARITY	
MONITOR INFO.		MODEL NAME	
		SERIAL NUMBER	
REFRESH NOTIFIER		ON / OFF	Off

4.3 Back Panel

a : AC POWER CONNECTOR (3P IEC Plug)

b : SIGNAL A INPUT CONNECTOR (DB9-15P)

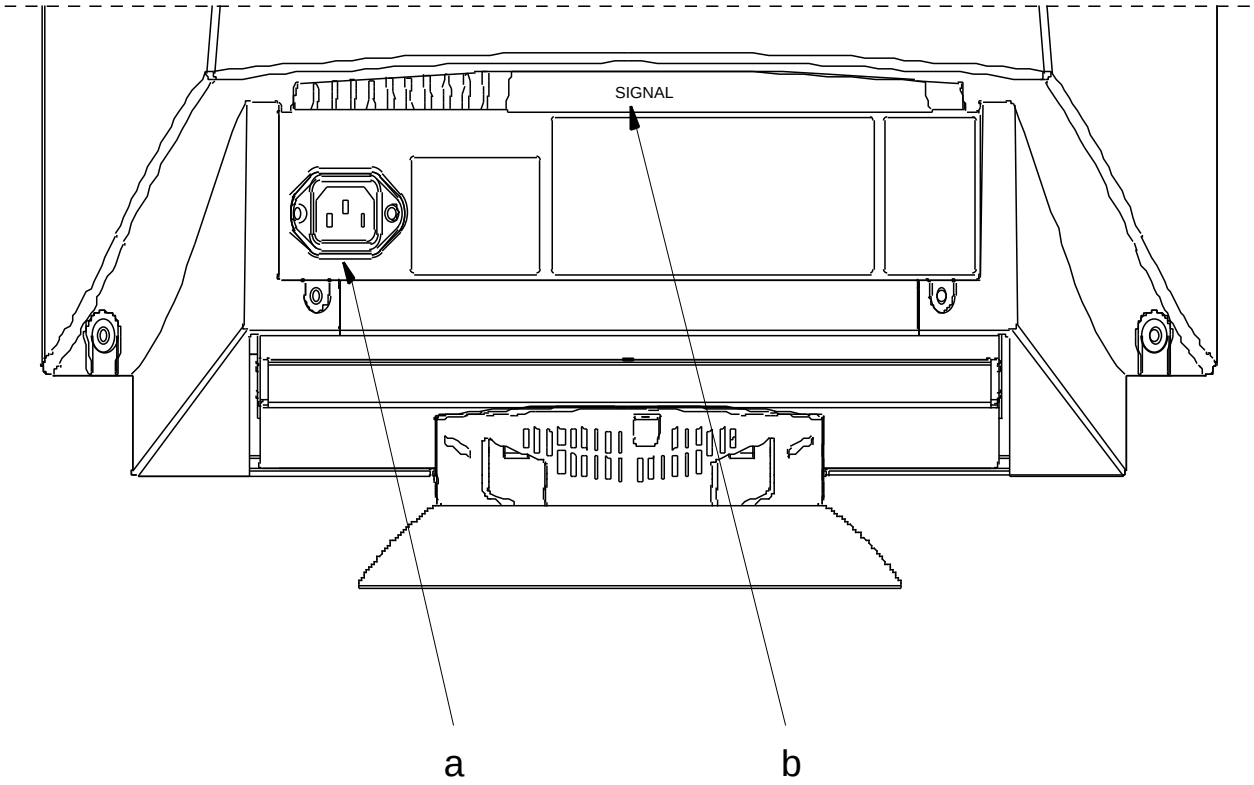

4.4 Connector Pin Assignment

1) Signal Input Connector (DB9-15P)

Pin	Signal
1	Red-video
2	Green-video
3	Blue-video
4	Gnd
5	DDC Gnd
6	Red Gnd
7	Green Gnd
8	Blue Gnd
9	+5VDC(from host)
10	Sync Gnd
11	Gnd
12	Serial data
13	H-sync or Composite sync
14	V-sync (V-clock)
15	Serial clock

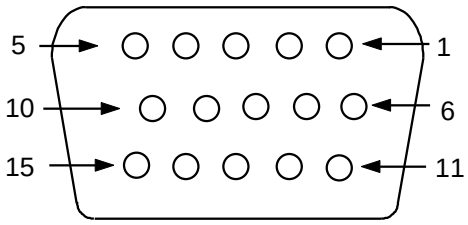

Rear Panel

4.5 DDC (Display Data Channel) Functions
VESA DDC2B , DDC2Bi Compliance.
See Appendix2 for EDID data.

4.6 Preset Timing
Factory-preset :9 see Appendix 1 for detail timing parameters.
Factory-preload :3 see Appendix 1 for detail timing parameters.
User-preset :15

Preset Timing Discrimination

Horizontal Frequency	≥1kHz
Vertical Frequency	≥1Hz
Sync Signal Polarity	H or V-sync signal polarity is different.

•The monitor is able to discriminate input signals
by at least one of above parameters.

5. Display Quality

5.1 Test Conditions

AC Voltage	120VAC 60Hz or 230VAC 50Hz
Video Signal	1600 x 1200 (106kHz, 85Hz) 0.7Vp-p
Warm Up	More than 30 min. with full white picture
Temperature	20 - 25 ˚C
Relative Humidity	40 - 80%
Magnetic Field	BH=0, BV=0.040mT
Contrast & Brightness	Contrast maximum and Brightness center position (Back Raster Luminance : Approx. 0.3cd/m^2)
Display Size	396 x 297mm for 4:3 aspect ratio
Ambient light	200 ± 50 lx
Luminance Meter	Minolta CA100 or Equivalent

•Unless specified, the monitor is set at the factory default setting.

5.2 Display size

4:3 aspect ratio	Width: 396mm , Height: 297mm
5:4 aspect ratio	Width: 371mm , Height: 297mm

5.3 Luminance

Luminance at CRT center	Full White: ≥100cd/m^2 (at Color No.1) ≥ 70 cd/m^2 (at sRGB) ≥ 70 cd/m^2 (at Color No.5)
Luminance Variation	ΔLuminance / Center Luminance: ≤25%
Back Raster Luminance	Approx. 0.3 cd/m^2 (at Color No.1 , No.5) Approx. 0 cd/m^2 (at sRGB)
	Raster must not visible at minimum Brightness control

5.4 Color

Color Temperature	Color-1: 9300K + 8 M.P.C.D. X=0.283 ± 0.020 Y=0.297 ± 0.020
	Color-2: 8200K (X=0.290 , Y=0.313)
	Color-3: 7500K (X=0.300 , Y=0.315)
	sRGB: 6500K (X=0.313 , Y=0.329)
	Color-5: 5000K + 8 M.P.C.D. X=0.345 ± 0.020 Y=0.359 ± 0.020
White Uniformity	≤ 0.020: in either the X or Y shift between the center and peripheral area (Color-1)
Color Tracking	Contrast Control: ±0.020 from 25cd/m^2 to Maximum at center Brightness position (Color-1)

5.5 Overall Distortion

Overall Distortion Except rotation and centering	H: ≤ 2.5mm , V: ≤ 3.0mm

•With Green-Crosshatch applied.
•The overall distortion is defined as the total of all image distortion excluding rotation and display centering.

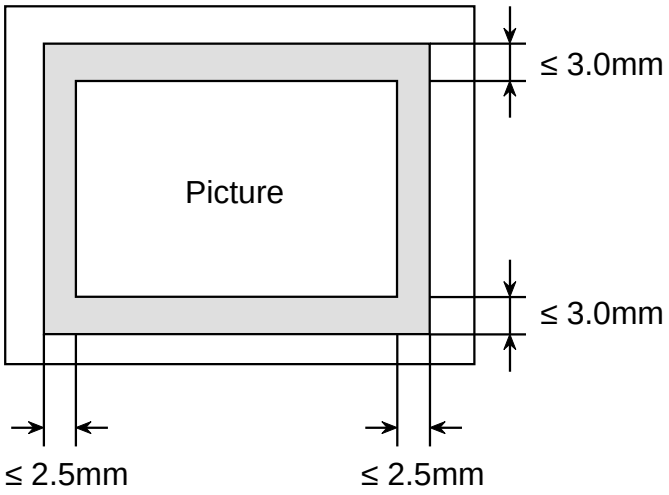

5.6 Linearity

Linearity	H: ≤15%(30-40k) , ≤12%(40-60k) ,≤10%(60-110k) adjacent: ≤ 7%
	V: ≤10% adjacent: ≤ 7%

•at preset timings
•With Green-Crosshatch (17 lines horizontally by 13 lines vertically) applied.
•The formula used to calculate linearity is:

$$\frac{Xmax - Xmin}{(Xmax + Xmin)/2} \times 100\% \qquad \frac{Ymax - Ymin}{(Ymax + Ymin)/2} \times 100\%$$

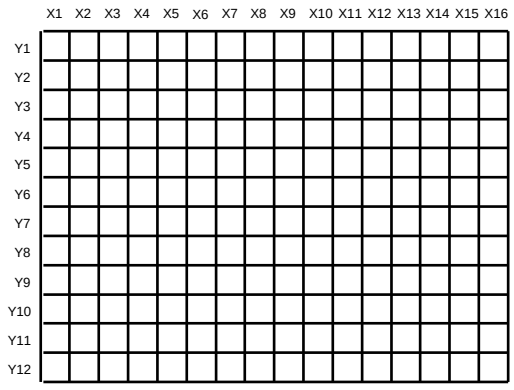

X1=X2=X3= ••• =X16
Y1=Y2=Y3= ••• =Y12

5.7 Misconvergence

Misconvergence	Area A: ≤ 0.25 mm within the 297mm diameter circle
	Area B: ≤ 0.35 mm within 396mm x 297mm

•With White-Crosshatch applied.
•Zone A is a circular area with 297mm diameter at the center.
•Zone B is a rectangular area (396mm x 297mm) outside of the zone A.
•Use worst case horizontal/vertical misconvergence between any two primary colors.

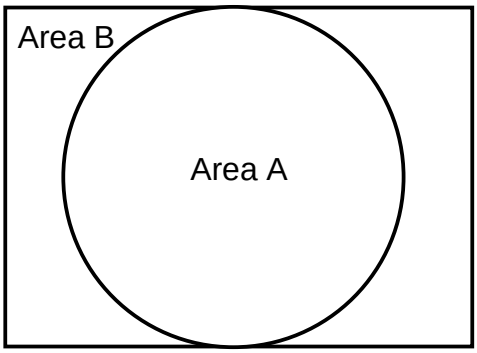

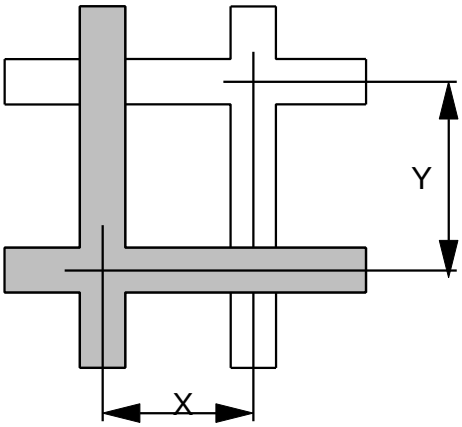

5.8 Focus

Focus	Displaying 7 x 9 pixel "e" with white single pixel strokes, the entire screen shall be readable with clearly discernible characters at normal viewing distance.

5.9 Raster Regulation

Rater Size Regulation	≤ 0.5% of the horizontal or vertical picture size

•The picture size change is less than adjusted value in either the horizontal or vertical direction over 30% to 100% luminance range and 90 - 132VAC or 198 - 264VAC Input respectively.

6. Mechanical Specifications

6.1 Cabinet , Tilt / Swivel Base

Molded material	Cabinet : ABS (Flame Class HB) Tilt /Swivel Base : ABS (Flame Class HB)
Cabinet color	Mist White (NEC Control Color No. : #8510)
Bezel Logo	See Fig.2
Tilt & Swivel	Right & Left : -90˚to +90˚Up & Down : 10˚ to -5˚
Dimension	495mm (W) x 493.5mm (H) x 473mm (D) 19.5" (W) x 19.4" (H) x 18.6" (D) (include Tilt /Swivel Base, see Fig.1)

6.2 Rating Label

see Fig. 3

6.3 Carton Box

Paper Material	Kraftliner and trifaced corrugated board (Double wall)
Carton Box Print	See Fig.5-1(North America) / Fig.5-2(Europe)
Dimension	See Fig.4
Packing Contents	See Fig.6

6.4 Weight

Net	approx. 29.7 kg (65.5 lbs)
Gross	approx. 35 kg (77.0 lbs)

6.5 Accessories

AC Power Cord	North America		see Fig.7-1
	Europe	except UK	see Fig.7-2
		U.K.	see Fig.7-3
Signal Cable			SC-B110 : see Fig.8
User's Guide	North America		3 Languages (English, German, French)
	Europe		11 Languages (English, Czech, German, Greek, Spain, French, Italian, Dutch, Polish, Russia, Turkish) attached CD-ROM

7. Environmental Conditions

7.1 Temperature, Relative Humidity & Altitude

	Operating	Storage and shipment
Temperature	5 - 35˚C	-20 - 60˚C
Relative Humidity	10 - 90% without condensation	10 - 90% without condensation
Altitude	3000m (10000ft)	15000m (50000ft)

7.2 Vibration Test (with carton box)

1) Random Vibration

Test Axis	3 axis
Search Frequency	5 - 200Hz
Acceleration	0 - 14.42m/s^{2}rms
Dwelling Time	30 minutes x 3 axis
Mounting	fixed firmly on the vibration table

7.3 Drop Test (with carton box)

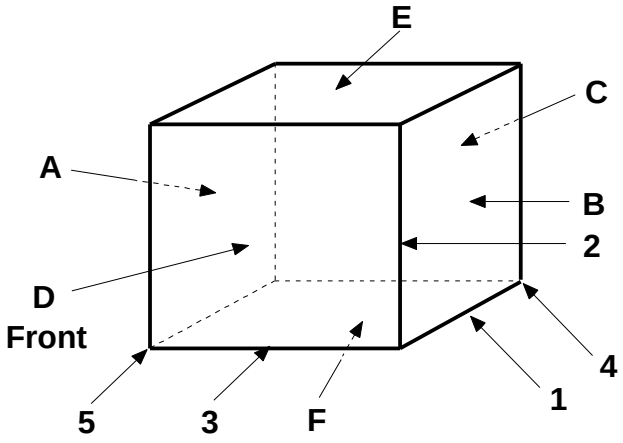

The inside unit shall be withstand without any damage by following procedure.
Drop to the hard wooden board from the position of the following heights.

After finish the drop test of edges (3 position) and also corners(2 position), tester has to change to new cushion. However for the carton box, tester must not change to the new box and use the damaged box continuously.

	Position	Height
Edge	1,2,3	40.5cm(16inch)
Corner	4,5	40.5cm(16inch)
Other Surfaces	A,B,C,D	40.5cm(16inch)
Top Surface	E	34.5cm(14inch)
Bottom Surface	F	46cm(18inch)

Appendix 1 Preset Timing Chart

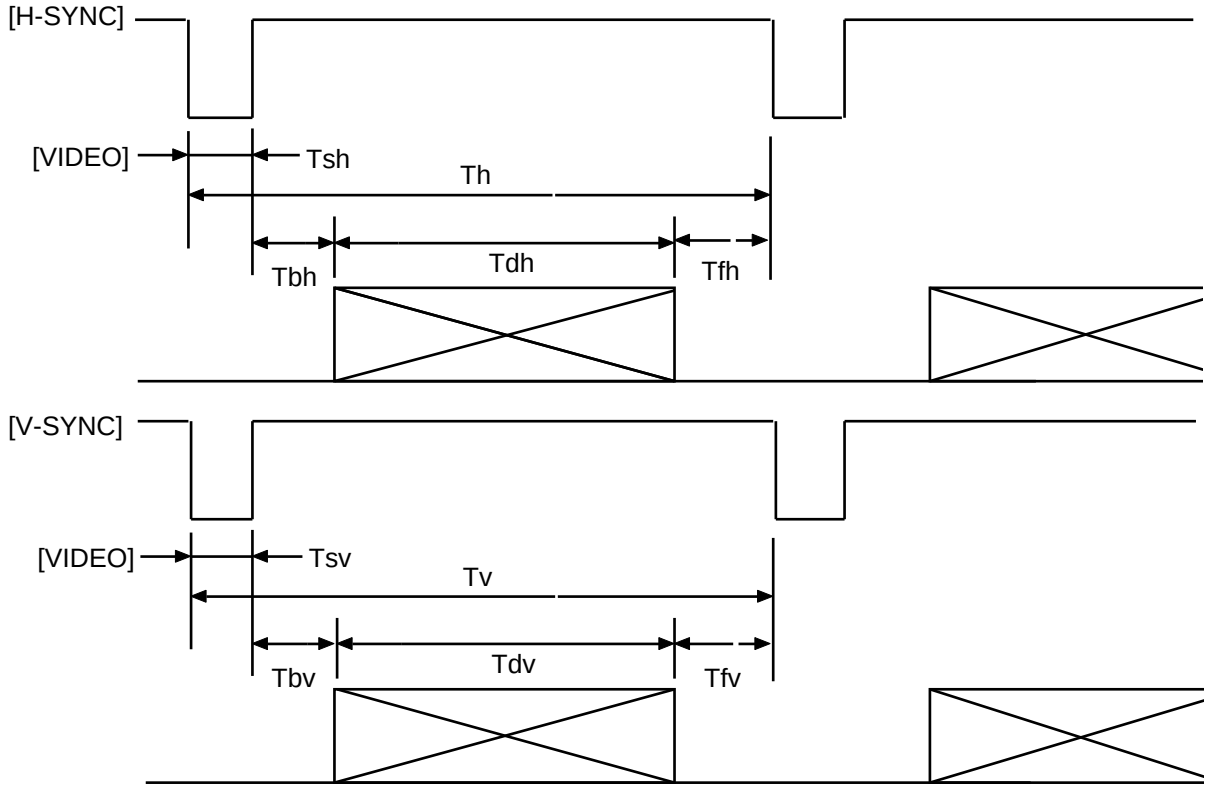

NO.	Clock (MHz)	Th (µSEC) (dot)	Tsh (µSEC) (dot)	Tfh (µSEC) (dot)	Tbh (µSEC) (dot)	Tdh (µSEC) (dot)	Tv (mSEC) (line)	Tsv (mSEC) (line)	Tfv (mSEC) (line)	Tbv (mSEC) (line)	Tdv (mSEC) (line)	Hs	Vs	Fh (kHz)	Fv (Hz)	REMARKS
1	25.175	31.778 (800)	3.813 (96)	0.636 (16)	1.907 (48)	25.422 (640)	16.683 (525)	0.064 (2)	0.318 (10)	1.048 (33)	15.253 (480)	-	-	31.469	59.940	VESA 640*480 / 60Hz
2	56.250	18.631 (1048)	1.138 (64)	0.569 (32)	2.702 (152)	14.222 (800)	11.756 (631)	0.056 (3)	0.019 (1)	0.503 (27)	11.179 (600)	+	+	53.674	85.061	VESA 800*600 / 85Hz
3	78.750	16.660 (1312)	1.219 (96)	0.203 (16)	2.235 (176)	13.003 (1024)	13.328 (800)	0.050 (3)	0.017 (1)	0.466 (28)	12.795 (768)	+	+	60.023	75.029	VESA 1024*768 / 75Hz
4	94.500	14.561 (1376)	1.016 (96)	0.508 (48)	2.201 (208)	10.836 (1024)	11.765 (808)	0.044 (3)	0.015 (1)	0.524 (36)	11.183 (768)	+	+	68.677	84.997	VESA 1024*768 / 85Hz
5	135.000	12.504 (1688)	1.067 (144)	0.119 (16)	1.837 (248)	9.481 (1280)	13.329 (1066)	0.038 (3)	0.013 (1)	0.475 (38)	12.804 (1024)	+	+	79.976	75.025	VESA 1280*1024 / 75Hz
6	157.500	10.971 (1728)	1.016 (160)	0.406 (64)	1.422 (224)	8.127 (1280)	11.761 (1072)	0.033 (3)	0.011 (1)	0.483 (44)	11.235 (1024)	+	+	91.146	85.027	VESA 1280*1024 / 85Hz
7	202.500	10.667 (2160)	0.948 (192)	0.316 (64)	1.501 (304)	7.901 (1600)	13.333 (1250)	0.032 (3)	0.011 (1)	0.491 (46)	12.800 (1200)	+	+	93.750	75.000	VESA 1600*1200 / 75Hz
8	229.500	9.412 (2160)	0.837 (192)	0.279 (64)	1.325 (304)	6.972 (1600)	11.765 (1250)	0.028 (3)	0.009 (1)	0.433 (46)	11.294 (1200)	+	+	106.250	85.000	VESA 1600*1200 / 85Hz
9	100.000	14.560 (1456)	1.280 (128)	0.320 (32)	1.440 (144)	11.520 (1152)	13.322 (915)	0.044 (3)	0.043 (3)	0.568 (39)	12.667 (870)	-	-	68.680	75.060	APPLE 21 1152*870 / 75Hz
10	28.322	31.777 (900)	3.813 (108)	0.635 (18)	1.907 (54)	25.422 (720)	14.268 (449)	0.064 (2)	0.381 (12)	1.112 (35)	12.711 (400)	-	+	31.470	70.090	DOS 720*400 / 70Hz
11	31.500	26.667 (840)	2.032 (64)	0.508 (16)	3.810 (120)	20.317 (640)	13.333 (500)	0.080 (3)	0.027 (1)	0.427 (16)	12.800 (480)	-	-	37.500	75.000	VESA 640*480 / 75Hz
12	49.500	21.333 (1056)	1.616 (80)	0.323 (16)	3.232 (160)	16.162 (800)	13.333 (625)	0.064 (3)	0.021 (1)	0.448 (21)	12.800 (600)	+	+	46.875	75.000	VESA 800*600 / 75Hz

Factory-preset : 1~9
Factory-preload : 10~12

Appendix 2 EDID data for VESA DDC

-- EDID DATA DUMP TEXT --
Manuf Code: NEC
Product Code LSB (HEX): B6
Product Code MSB (HEX): 61
(Microsoft INF ID: NEC61B6)
Serial Number (HEX): **
Week of Manuf: WW
Year of Manuf: YY

EDID Version: 1
EDID Revision: 2
Extension Flag: 0

Video:
  Input Signal: ANALOG
  Setup: NO
  Sync on Green: NO
  Composite Sync: YES
  Separate Sync: YES
  V Sync Serration: NO
  V Signal Level: 0.700V/0.300V (1V p-p)

Max Image Size H: 40 cm
Max Image Size V: 30 cm
DPMS Stand By: YES
DPMS Suspend: YES
DPMS Active Off: YES
GTF Support: YES
Standard Default Color Space: NO
Preferred Timing Mode: YES
Display Type: RGB Color

Color:
  Gamma: 2.20
  Red x: 0.627
  Red y: 0.341
  Green x: 0.292
  Green y: 0.605
  Blue x: 0.149
  Blue y: 0.072
  White x: 0.283
  White y: 0.297

Established Timings:
  720x400 @ 70 Hz
  720x400 @ 88 Hz
  640x480 @ 60 Hz
  640x480 @ 67 Hz
  640x480 @ 72 Hz
  640x480 @ 75 Hz
  800x600 @ 56 Hz
  800x600 @ 60 Hz
  800x600 @ 72 Hz
  800x600 @ 75 Hz
  832x624 @ 75 Hz
  1024x768 @ 87 Hz (I)
  1024x768 @ 60 Hz
  1024x768 @ 70 Hz
  1024x768 @ 75 Hz
  1152x870 @ 75 Hz
  1280x1024 @ 75 Hz

Standard Timing #1:
  Horizontal Active Pixels: 800
  Aspect Ratio: 4:3
  (600 active lines)
  Refresh Rate: 85 Hz

Standard Timing #2:
  Horizontal Active Pixels: 1024
  Aspect Ratio: 4:3
  (768 active lines)
  Refresh Rate: 85 Hz

Standard Timing #3:
  Horizontal Active Pixels: 1152
  Aspect Ratio: 4:3
  (864 active lines)
  Refresh Rate: 75 Hz

Standard Timing #4:
  Horizontal Active Pixels: 1280
  Aspect Ratio: 4:3
  (960 active lines)
  Refresh Rate: 85 Hz

Standard Timing #5:
  Horizontal Active Pixels: 1280
  Aspect Ratio: 5:4
  (1024 active lines)
  Refresh Rate: 85 Hz

Standard Timing #6:
  Horizontal Active Pixels: 1600
  Aspect Ratio: 4:3
  (1200 active lines)
  Refresh Rate: 75 Hz

Standard Timing #7:
  Horizontal Active Pixels: 1792
  Aspect Ratio: 4:3
  (1344 active lines)
  Refresh Rate: 75 Hz

Standard Timing #8:
  Horizontal Active Pixels: 1920
  Aspect Ratio: 4:3
  (1440 active lines)
  Refresh Rate: 72 Hz

Detailed Timing (block #1):
---Preferred Timing Mode---
  Pixel Clock: 229.50 MHz
  Horizontal Active: 1600 pixels
  Horizontal Blanking: 560 pixels
  Vertical Active: 1200 lines
  Vertical Blanking: 50 lines
  (Horizontal Frequency: 106.25 kHz)
  (Vertical Frequency: 85.0 Hz)
  Horizontal Sync Offset: 64 pixels
  Horizontal Sync Width: 192 pixels
  Vertical Sync Offset: 1 lines
  Vertical Sync Width: 3 lines
  Horizontal Border: 0 pixels
  Vertical Border: 0 lines
  Horizontal Image Size: 396 mm
  Vertical Image Size: 297 mm
  Interlaced: NO
  Image: Normal Display
  Sync: Digital Separate
  Bit 1: ON
  Bit 2: ON

Monitor Range Limits (block #2):
  Minimum Vertical Rate: 50 Hz
  Maximum Vertical Rate: 160 Hz
  Minimum Horizontal Rate: 30 kHz
  Maximum Horizontal Rate: 110 kHz
  Maximum Pixel Clock: 330 MHz
  GTF Data: 00 0a 20 20 20 20 20 20

Monitor Name (block #3):
NEC FE1250+

Monitor Serial Number (block #4): ##

EDID EDITOR V1.40 (000621) (C)
Mitsubishi Electric 1995-2000

EDID DATA DUMP HEX
00 ff ff ff ff ff ff 00
38 a3 b6 61 ** ** ** **
WW YY 01 02 0c 28 1e 78
eb 9c 68 a0 57 4a 9b 26
12 48 4c ff ff 80 45 59
61 59 71 4f 81 59 81 99
a9 4f c1 4f d1 4c a6 59
40 30 62 b0 32 40 40 c0
13 00 8c 29 11 00 00 1e
00 00 00 fd 00 32 a0 1e
6e 21 00 0a 20 20 20 20
20 20 00 00 00 fc 00 4e
45 43 20 46 45 31 32 35
30 2b 0a 20 00 00 00 ff
00 ## ## ## ## ## ## ##
0a 20 20 20 00 SS

** : serial number1
WW : manufacture week
YY : manufacture year
: serial number2
SS : check sum

•CABINET COLOR : Mist white (#8510)

•TILT / SWIVEL BASE
Swivel Angle : +90° ~ -90°
Tilt Angle : +10° ~ -5°

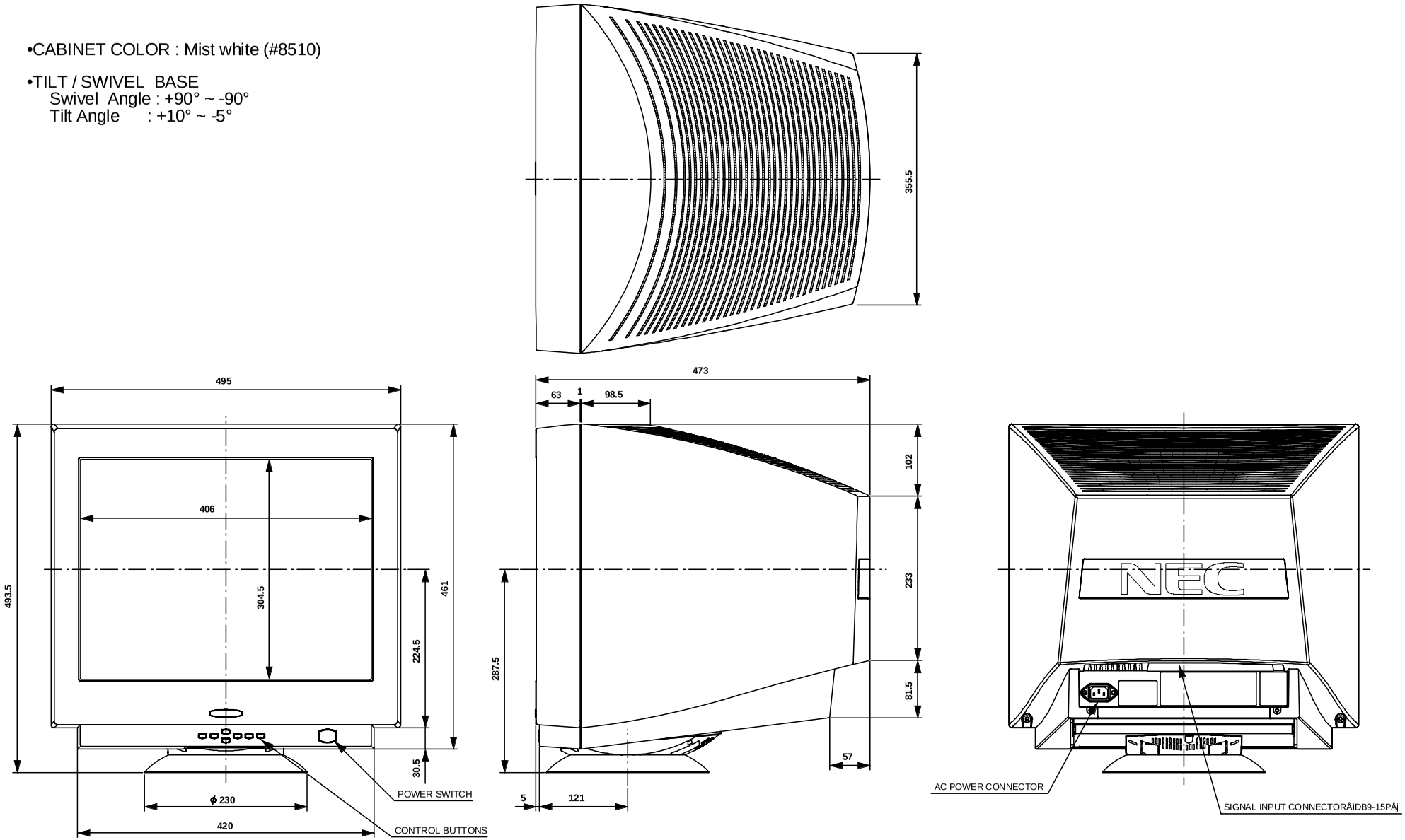

Fig. 1 OUTLINE

VSP-C0462

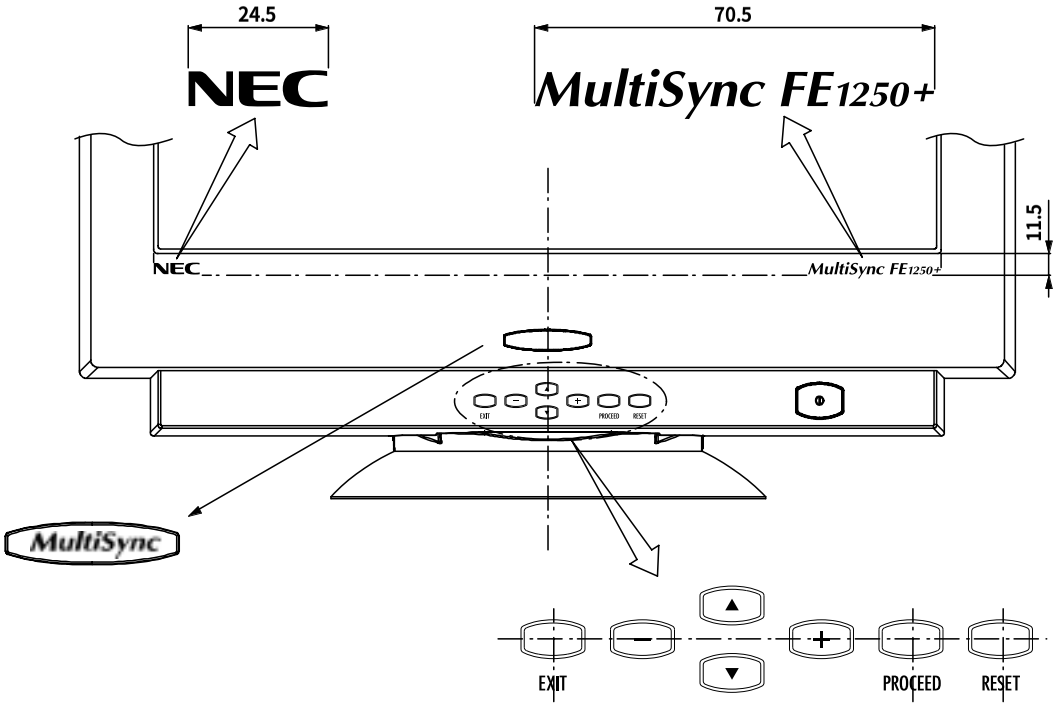

COLOR OF LETTERING : Kingfisher Blue (#6704)

Fig. 2 BEZEL LOGO

VSP-C0462

COLOR OF BACKGROUND •••• Graysh white(Cabinet color)
COLOR OF LETTERING ••••• Pantone cool gray 10C

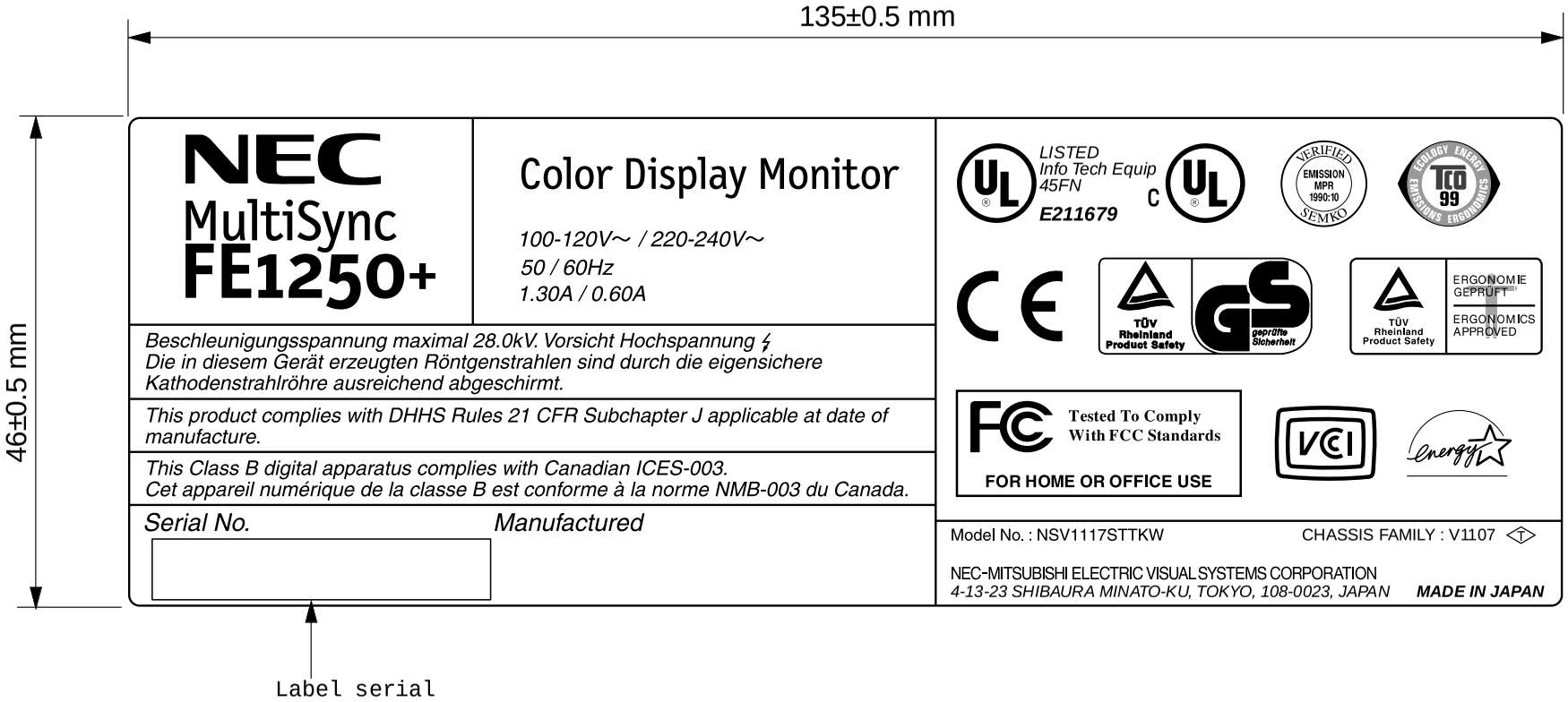

Fig.3 RATING LABEL

VSP-C0462

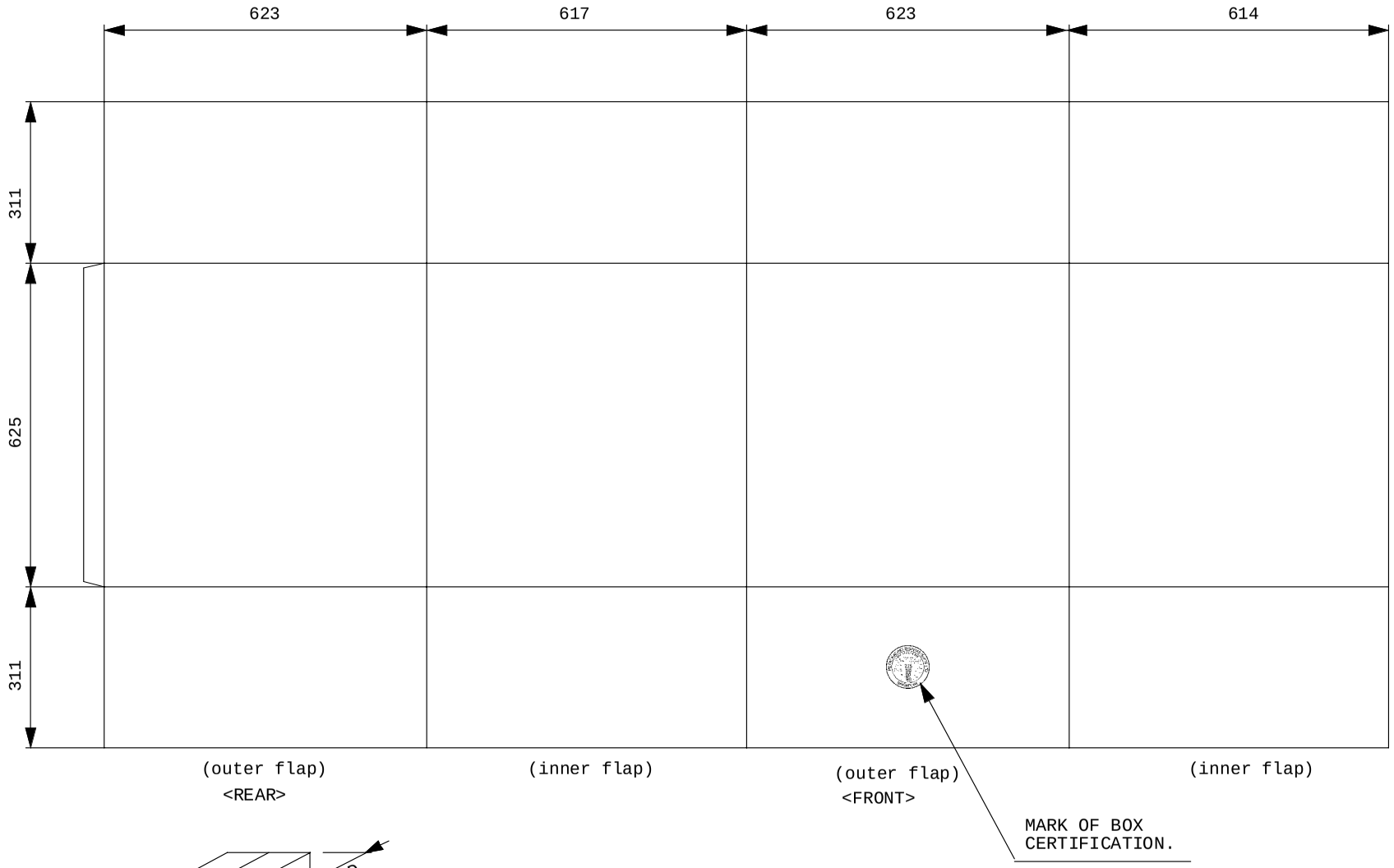

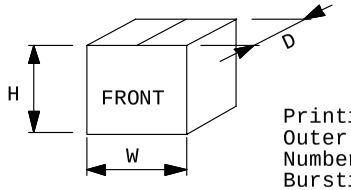

Printing process.	:	FLEXO-PRINTING
Outer dimension.	:	W:632 x H:643 x D:626 (mm)
Number of piles.	:	Max. 5 piles.
Bursting strength.	:	275LBS / inch^2
Material.	:	Kraft color linerboard and trifaced corrugated board. (Double wall)
Printing color	:	Black

Fig.4 CARTON BOX

VSP-C0462

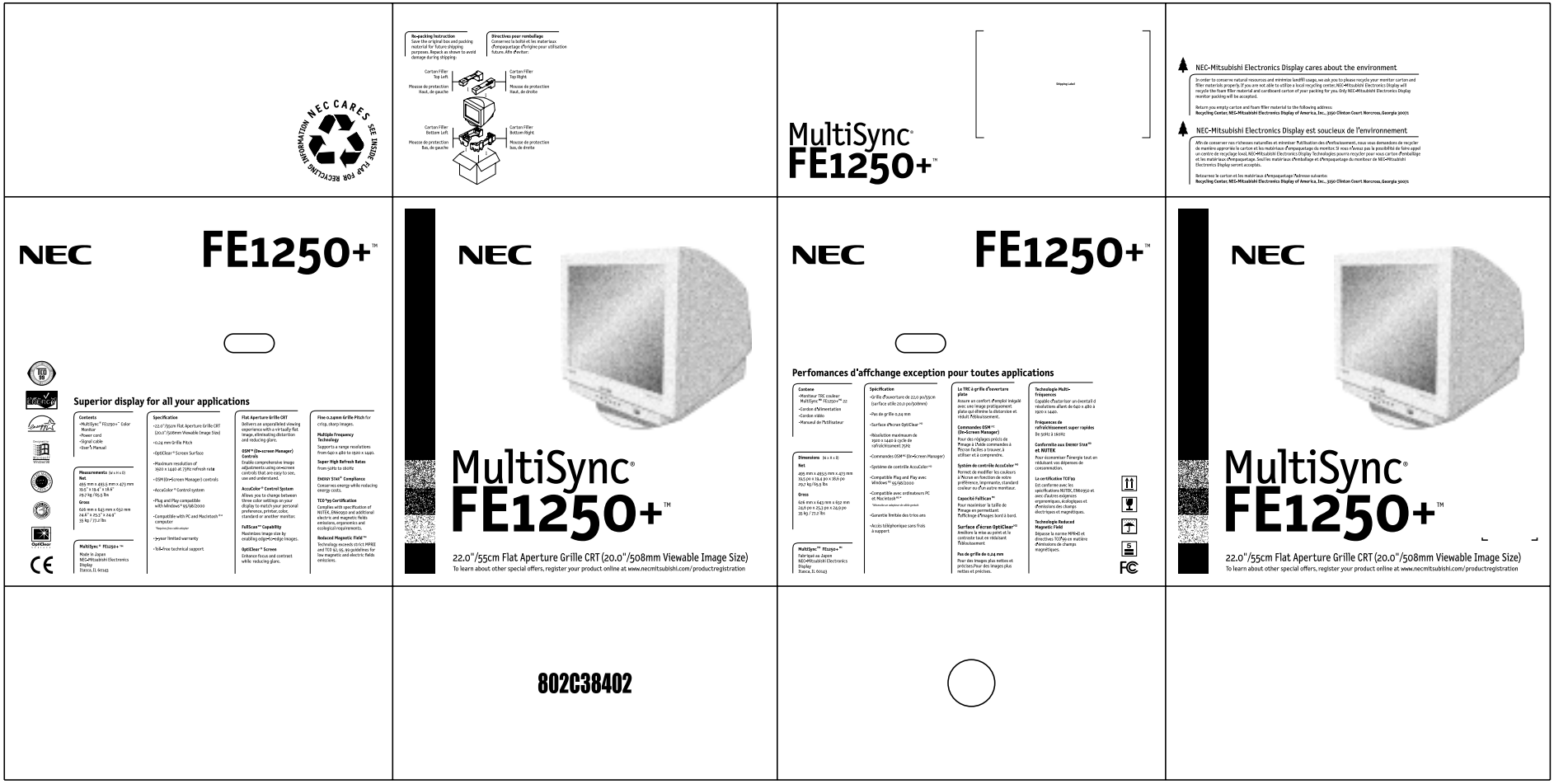

Fig.5-1 PRINTING SPECIFICATION OF CARTON BOX (North America)

VSP-C0462

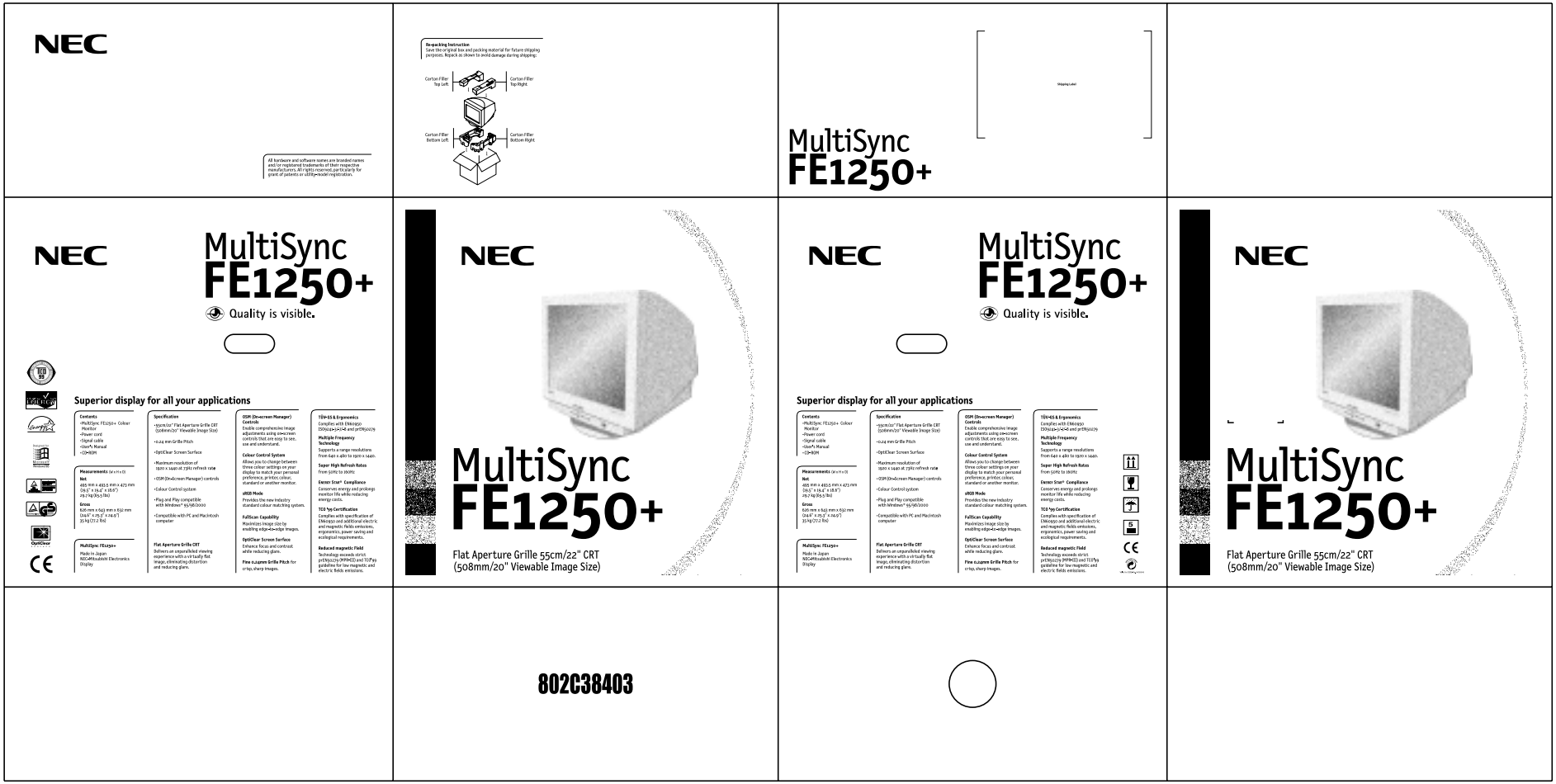

Fig.5-2 PRINTING SPECIFICATION OF CARTON BOX (Europe)

VSP-C0462

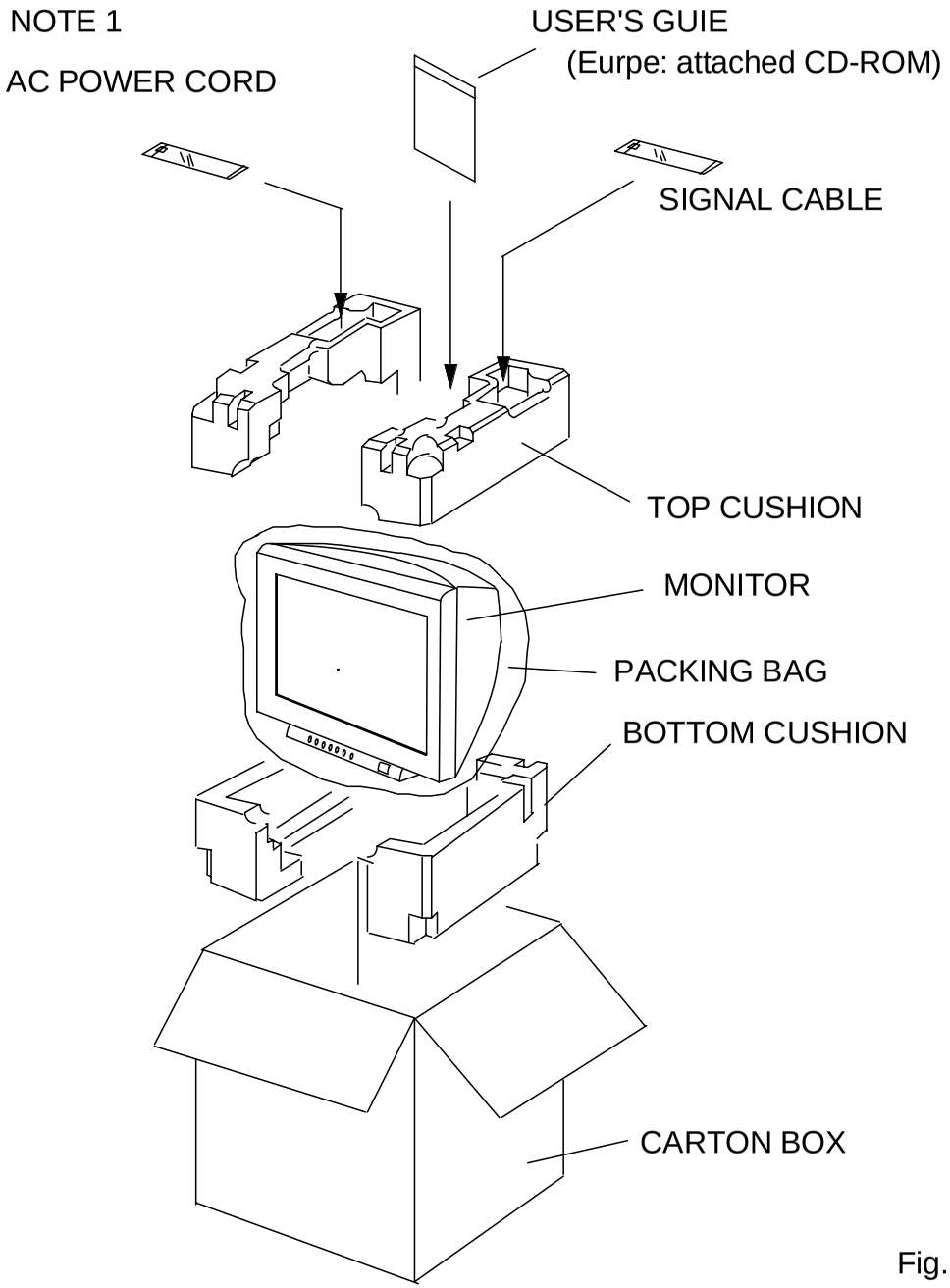

NOTE 1: AC POWER CORD
(1) North America : see Fig.7-1
(2) Eurpe : see Fig.7-2 & Fig.7-3

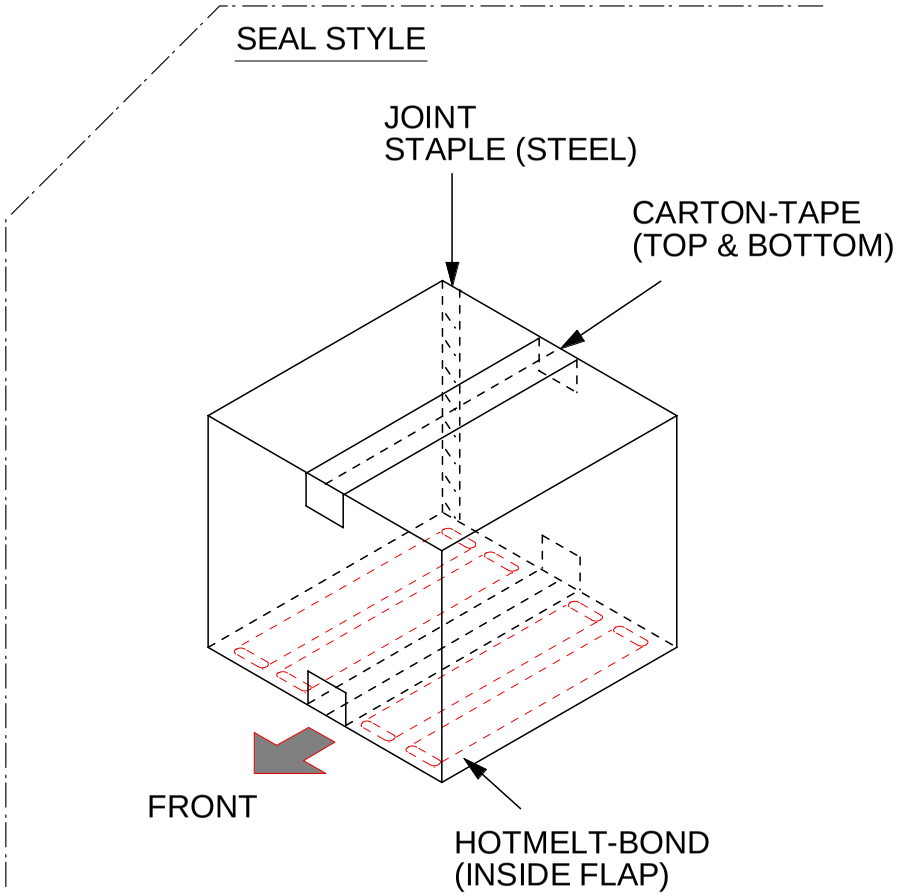

Fig.6 PACKING STYLE

VSP-C0462

<SPECIFICATION>

1.CABLE:Cross - section Area-----AWG18X3C

2.JACKET:PVC

3.ABILITY

(1) VOLTAGE : AC 125V
(2) AMPERAGE : AC 10A
(3) TEMPERATURE : 60°C

4.REGULATORY APPROVALS:UL, CSA

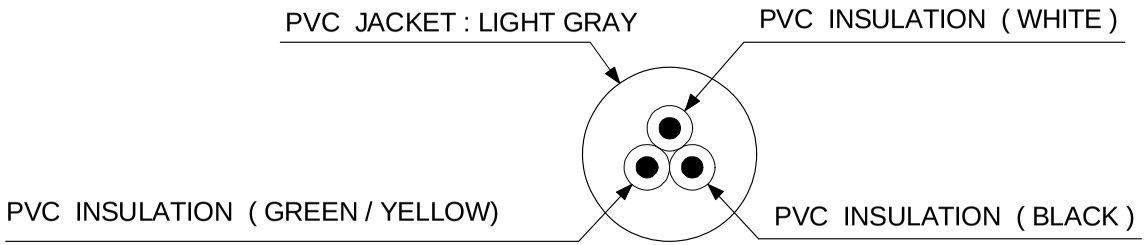

CONSTRUCTION

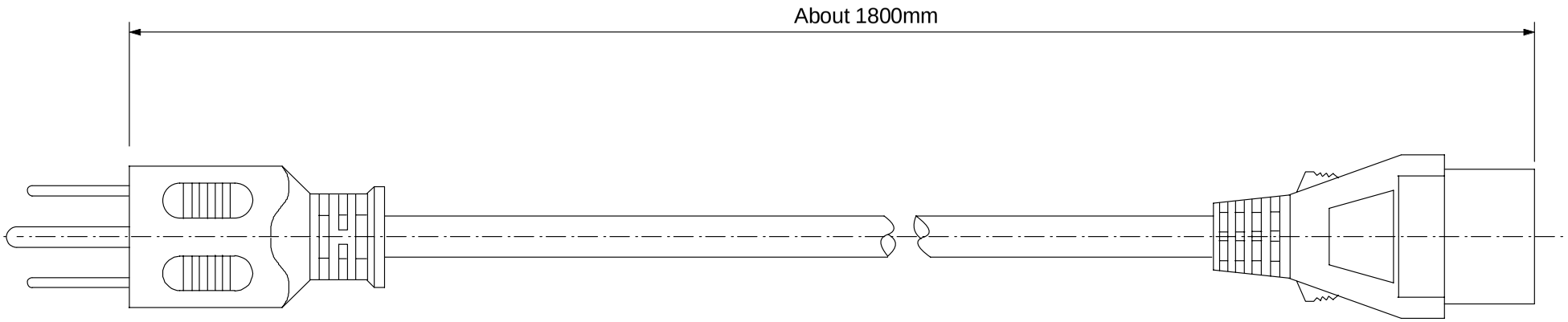

Fig. 7 - 1 AC POWER CORD (For North America)

VSP-C0462

<SPECIFICATION>

1.CABLE : Cross - section Area----1.0mm^2 X3C

2.JACKET : PVC

3.ABILITY

(1) VOLTAGE : AC 250V
(2) AMPERAGE :AC 10A
(3) TEMPERATURE :70°C

4.REGULATORY APPROVALS:VDE,KEMA-MEUK,SEMKO,NEMKO,DEMKO, FIMKO,SEV,ÖVE,IEMMEQU,CEBEC,IEC227

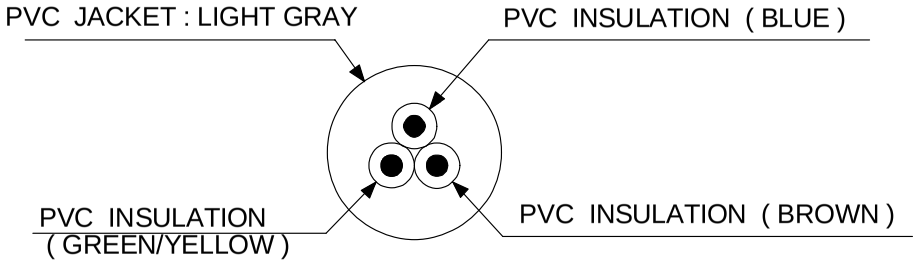

CONSTRUCTION

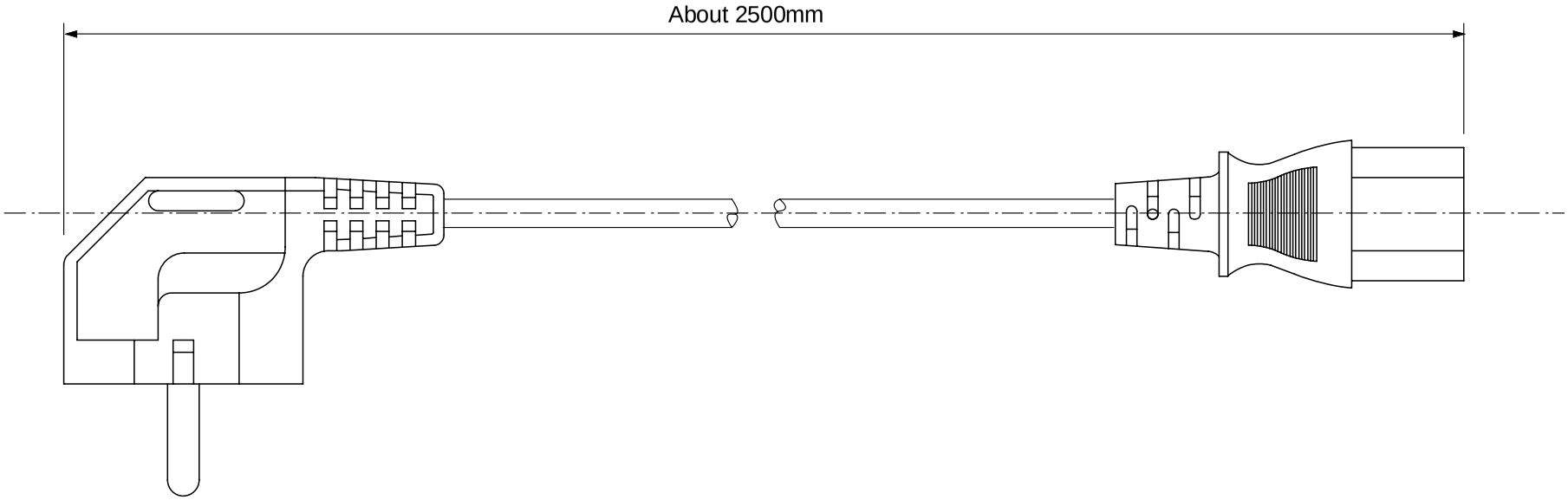

Fig. 7 - 2 AC POWER CORD (For except U.K.)

VSP-C0462

<SPECIFICATION>

1.CABLE : Cross - section Area---1.0mm^2 X3C

2.JACKET : PVC

3.ABILITY

(1) VOLTAGE : AC 250V
(2) AMPERAGE : AC 10A
(3) TEMPERATURE : 60°C

4.REGULATORY APPROVALS : BS

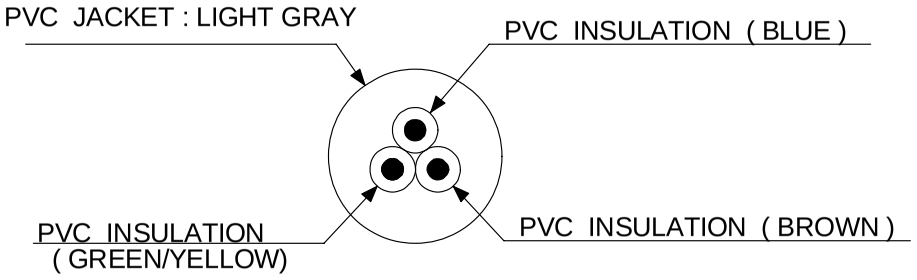

CONSTRUCTION

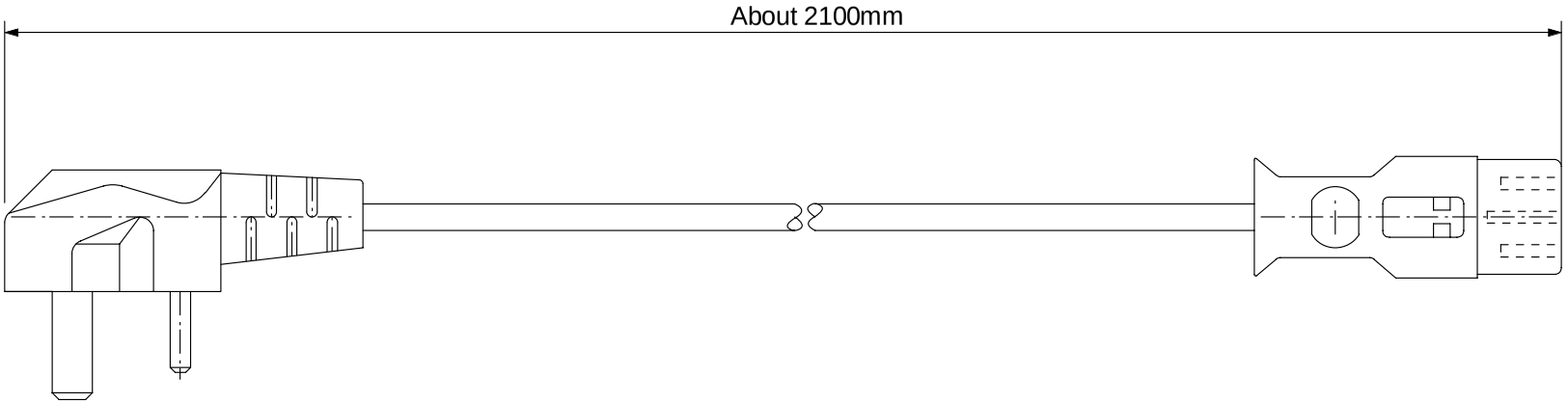

Fig. 7 - 3 AC POWER CORD (For U. K.)

VSP-C0462

SIGNAL CABLE

<SPECIFICATION>

1. JACKET:PVC (Color.....Light gray)
2. ABILITY
   (1)VOLTAGE:30V
   (2)TEMPERATURE:80 C°

Packing

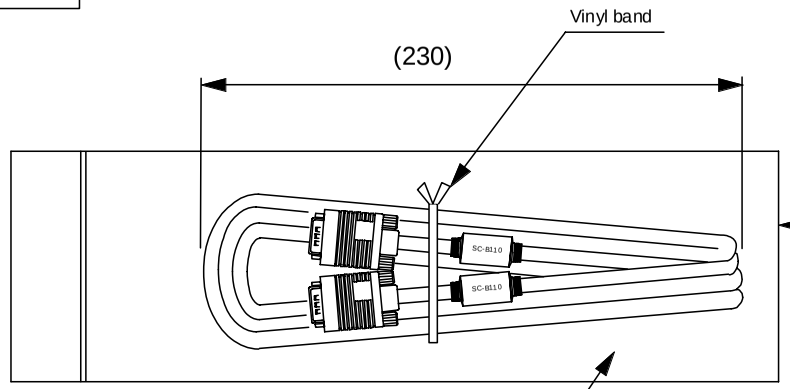

Vinyl bag specifications

•Material:Polyethylene (PE)
•Thickness:0.05mm
•Dimension:100X300mm

The undermentioned content is printed in red.

NEC-MITSUBISHI ELECTRIC VISUAL SYSTEMS CORPORATION S C - B 1 1 0

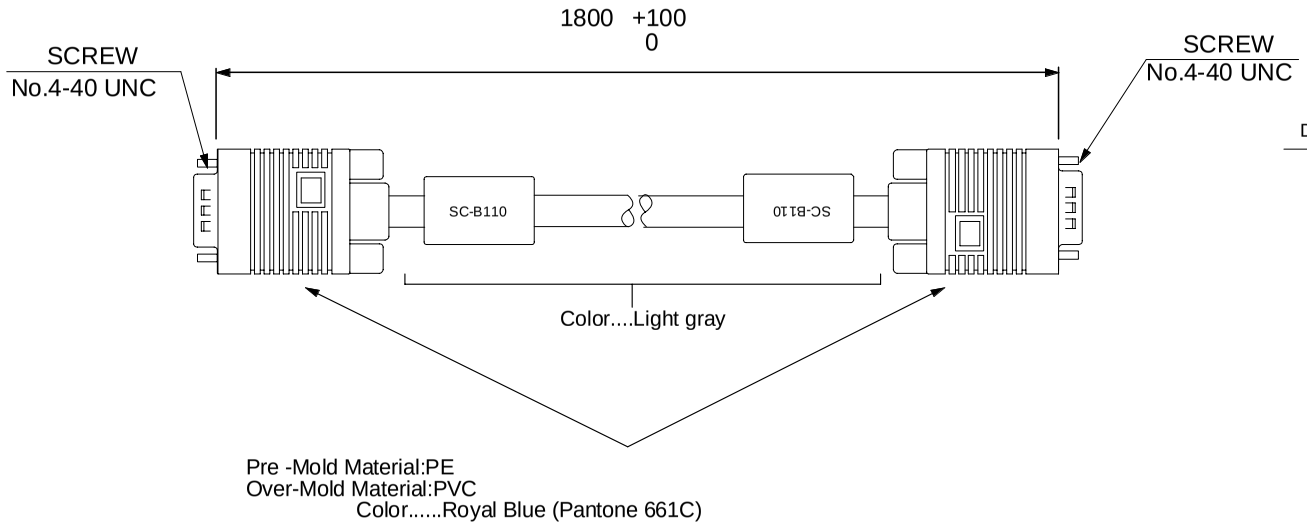

WIRING LIST

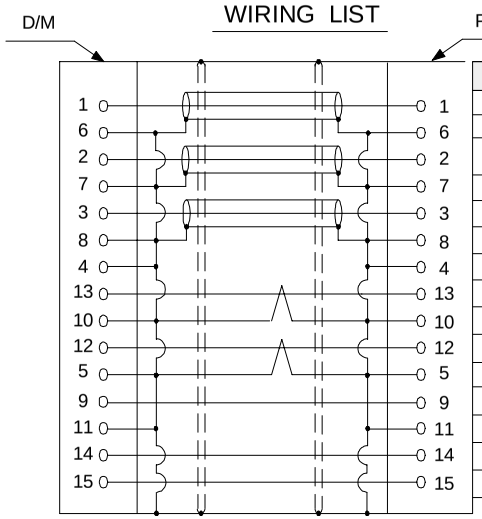

SIGNAL
Red - video
Red Gnd
Green - video or Composite sync with Green video
Green Gnd
Blue - video
Blue Gnd
Gnd
H - sync or Composite sync
Sync Gnd
Serial data
DDC Gnd
———
Gnd
V - sync (V-clock)
Serial clock

Fig. 8 SIGNAL CABLE

VSP-C0462

MultiSync FE1250+

User's Manual

NEC

For the Customer to use in U.S.A. or Canada

Canadian Department of Communications Compliance Statement

DOC: This Class B digital apparatus meets all requirements of the Canadian Interference-Causing Equipment Regulations.
C-UL: Bears the C-UL Mark and is in compliance with Canadian Safety Regulations according to CSA C22.2 #950.

FCC Information

1. Use the attached specified cables with the MultiSync NSV1117STTKW colour monitor so as not to interfere with radio and television reception.
   (1) Please use the supplied power cable or equivalent to ensure FCC compliance.
   (2) Shielded captive type signal cable.
   Use of other cables and adapters may cause interference with radio and television reception.
2. This equipment has been tested and found to comply with the limits for a Class B digital device, pursuant to part 15 of the FCC Rules. These limits are designed to provide reasonable protection against harmful interference in a residential installation. This equipment generates, uses, and can radiate radio frequency energy, and, if not installed and used in accordance with the instructions, may cause harmful interference to radio communications. However, there is no guarantee that interference will not occur in a particular installation. If this equipment does cause harmful interference to radio or television reception, which can be determined by turning the equipment off and on, the user is encouraged to try to correct the interference by one or more of the following measures:
   - Reorient or relocate the receiving antenna.
   - Increase the separation between the equipment and receiver.
   - Connect the equipment into an outlet on a circuit different from that to which the receiver is connected.
   - Consult your dealer or an experienced radio/TV technician for help.

If necessary, the user should contact the dealer or an experienced radio/television technician for additional suggestions. The user may find the following booklet, prepared by the Federal Communications Commission, helpful: “How to Identify and Resolve Radio-TV Interference Problems.” This booklet is available from the U.S. Government Printing Office, Washington, D.C., 20402, Stock No. 004-000-00345-4.
No user serviceable parts inside. Do not attempt to modify this equipment. If modified, your authority to operate this equipment might be voided by FCC.

VCCI Statement

この装置は、情報処理装置等電波障害自主規制協議会(VCCI)の基準に基づくクラスB情報技術装置です。 この装置は、 家庭環境で使用することを目的としていますが、 この装置がラジオやテレビジョン受信機に近接して使用されると、 受信障害を引き起こすことがあります。
取扱説明書に従って正しい取り扱いをしてください。

Declaration

Declaration of the Manufacturer

We hereby certify that the color monitor MultiSync FE1250+ (NSV1117STTKW) is in compliance with Council Directive 73/23/EEC:

- EN 60950

Council Directive 89/336/EEC:

- EN 55022
- EN 61000-3-2
- EN 61000-3-3
- EN 55024

and marked with

CE

NEC-Mitsubishi Electric Visual Systems Corporation
4-13-23, Shibaura,
Minato-Ku
Tokyo 108-0023, JAPAN

Safety Instruction

WARNING

TO PREVENT FIRE OR SHOCK HAZARDS, DO NOT EXPOSE THIS UNIT TO RAIN OR MOISTURE. ALSO, DO NOT USE THIS UNIT'S POLARIZED PLUG WITH AN EXTENSION CORD RECEPTACLE OR OTHER OUTLETS UNLESS THE PRONGS CAN BE FULLY INSERTED.
REFRAIN FROM OPENING THE CABINET AS THERE ARE HIGH VOLTAGE COMPONENTS INSIDE. REFER SERVICING TO QUALIFIED SERVICE PERSONNEL.

CAUTION

RISK OF ELECTRIC SHOCK • DO NOT OPEN

CAUTION

TO REDUCE THE RISK OF ELECTRIC SHOCK, MAKE SURE POWER CORD IS UNPLUGGED FROM WALL SOCKET. TO FULLY DISENGAGE THE POWER TO THE UNIT, PLEASE DISCONNECT THE POWER CORD FROM THE AC OUTLET. DO NOT REMOVE COVER (OR BACK). NO USER SERVICEABLE PARTS INSIDE. REFER SERVICING TO QUALIFIED SERVICE PERSONNEL.

This symbol warns user that uninsulated voltage within the unit may have sufficient magnitude to cause electric shock. Therefore, it is dangerous to make any kind of contact with any part inside this unit.

This symbol alerts the user that important literature concerning the operation and maintenance of this unit has been included. Therefore, it should be read carefully in order to avoid any problems.

ENERGY STAR® is a U.S. registered trademark. All other brands and product names are trademarks or registered trademarks of their respective owners.
As an ENERGY STAR Partner, NEC-Mitsubishi Electric Visual Systems Corporation has determined that this product meets the ENERGY STAR guidelines for energy efficiency.
The ENERGY STAR emblem does not represent EPA endorsement of any product or service.
All other trademarks mentioned in this manual are the property of their respective owners.

TCO’99

Congratulations! You have just purchased a TCO’99 approved and labeled product! Your choice has provided you with a product developed for professional use. Your purchase has also contributed to reducing the burden on the environment and also to the further development of environmentally adapted electronics products.

Why do we have environmentally labelled computers?

In many countries, environmental labelling has become an established method for encouraging the adaptation of goods and services to the environment. The main problem, as far as computers and other electron-ics equipment are concerned, is that environmentally harmful substances are used both in the products and during their manufacture. Since it is not so far possible to satisfactorily recycle the majority of electronics equipment, most of these potentially damaging substances sooner or later enter nature.

There are also other characteristics of a computer, such as energy consumption levels, that are important from the viewpoints of both the work (internal) and natural (external) environments. Since all methods of electricity generation have a negative effect on the environment (e.g. acidic and climate-influencing emissions, radioactive waste), it is vital to save energy. Electronics equipment in offices is often left running continuously and thereby consumes a lot of energy.

What does labelling involve?

This product meets the requirements for the TCO’99 scheme which provides for international and environmental labelling of personal computers. The labelling scheme was developed as a joint effort by the TCO (The Swedish Confederation of Professional Employees), Svenska Naturskyddsforeningen (The Swedish Society for Nature Conservation) and Statens Energimyndighet (The Swedish National Energy Administration).

Approval requirements cover a wide range of issues: environment, ergonomics, usability, emission of electric and magnetic fields, energy consumption and electrical and fire safety.

The environmental demands impose restrictions on the presence and use of heavy metals, brominated and chlorinated flame retardants, CFCs (freons) and chlorinated solvents, among other things. The product must be prepared for recycling and the manufacturer is obliged to have an environmental policy which must be adhered to in each country where the company implements its operational policy.

The energy requirements include a demand that the computer and/or display, after a certain period of inactivity, shall reduce its power consumption to a lower level in one or more stages. The length of time to reactivate the computer shall be reasonable for the user.

Labelled products must meet strict environmental demands, for example, in respect of the reduction of electric and magnetic fields, physical and visual ergonomics and good usability.

Below you will find a brief summary of the environmental requirements met by this product. The complete environmental criteria document may be ordered from:

TCO Development

SE-114 94 Stockholm, Sweden

Fax: +46 8 782 92 07

Email (Internet): development@tco.se

Current information regarding TCO'99 approved and labelled products may also be obtained via the Internet, using the address:

http://www.tco-info.com/

Environmental requirements

Flame retardants

Flame retardants are present in printed circuit boards, cables, wires, casings and housings. Their purpose is to prevent, or at least to delay the spread of fire. Up to 30% of the plastic in a computer casing can consist of flame retardant substances. Most flame retardants contain bromine or chloride, and those flame retardants are chemically related to another group of environmental toxins, PCBs. Both the flame retardants containing bromine or chloride and the PCBs are suspected of giving rise to severe health effects, including reproductive damage in fish-eating birds and mammals, due to the bio-accumulative* processes. Flame retardants have been found in human blood and researchers fear that disturbances in foetus development may occur.

The relevant TCO'99 demand requires that plastic components weighing more than 25 grams must not contain flame retardants with organically bound bromine or chlorine. Flame retardants are allowed in the printed circuit boards since no substitutes are available.

Cadmium**

Cadmium is present in rechargeable batteries and in the colour-generating layers of certain computer displays. Cadmium damages the nervous system and is toxic in high doses. The relevant TCO'99 requirement states that batteries, the colour-generating layers of display screens and the electrical or electronics components must not contain any cadmium.

Mercury**

Mercury is sometimes found in batteries, relays and switches. It damages the nervous system and is toxic in high doses. The relevant TCO'99 requirement states that batteries may not contain any Mercury. It also demands that no mercury is present in any of the electrical or electronics components associated with the labelled unit.

CFCs (freons)

The relevant TCO'99 requirement states that neither CFCs nor HCFCs may be used during the manufacturing and assembly of the product. CFCs (freons) are sometimes used for washing printed circuit boards. CFCs break down ozone and thereby damage the ozone layer in the stratosphere, causing increased reception on Earth of ultraviolet light with e. g. increased risks of skin cancer (malignant melanoma) as a consequence.

Lead**

Lead can be found in picture tubes, display screens, solders and capacitors. Lead damages the nervous system and in higher doses, causes lead poisoning. The relevant TCO'99 requirement permits the inclusion of lead since no replacement has yet been developed.

*Bio-accumulative is defined as substances which accumulate within living organisms.
**Lead, Cadmium and Mercury are heavy metals which are Bio-accumulative.

Contents

Your new MultiSync FE1250+ monitor box* should contain the following:

- MultiSync FE1250+ Monitor with tilt/swivel base
- Power cord
- Captive Signal Cable
- User's Manual
- CD-ROM:
  Includes complete User's Manual in PDF format and Windows related files (Inf file and color profile). To see the complete User's Manual, Acrobat Reader 4.0 must be installed at your PC.

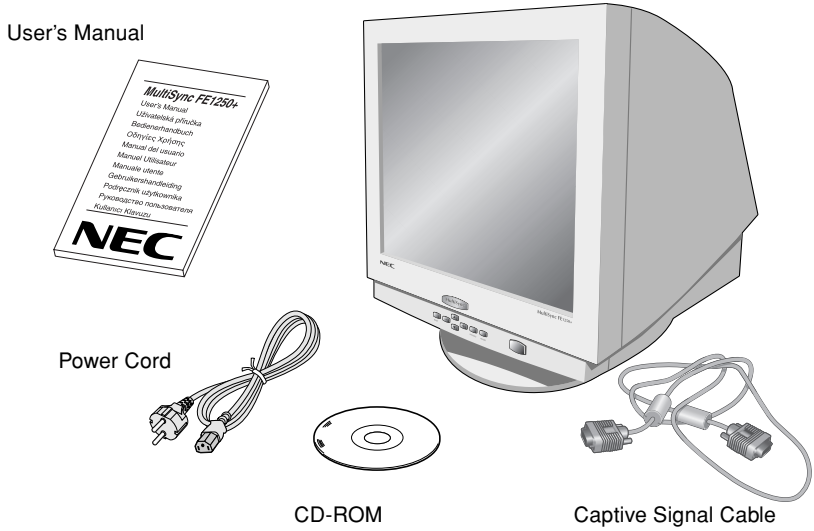

* Remember to save your original box and packing material to transport or ship the monitor.

Quick Start

To attach the MultiSync FE1250+ monitor to your system, follow these instructions:

1. Turn off the power to your computer.
2. If necessary, install the display card into your system. For more information, refer to the display card manual.
3. **For the PC:** Connect the 15-pin mini D-SUB of the captive signal cable to the connector of the display card in your system (**Figure A.1**). Tighten all screws.

   For the Mac: Connect the Macintosh cable adapter (not included) to the monitor connector on the Macintosh (**Figure B.1**). Attach the 15-pin mini D-SUB end of the captive signal cable to the Macintosh cable adapter on the computer (**Figure B.1**). Tighten all screws.
4. The Windows® 95/98/2000 INF file for your MultiSync monitor can be found on the CD-ROM, delivered with the monitor.
5. Connect one end of the power cord to the MultiSync FE1250+ monitor and the other end to the power outlet (**Figure C.1**).
6. Turn on the monitor (**Figure D.1**) and the computer.

NOTE: If you have any problems, please refer to the **Troubleshooting** section of this User's Manual.

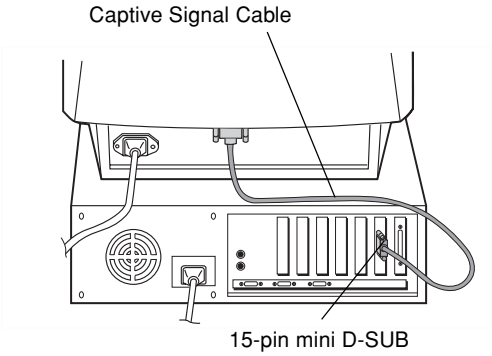

Figure A.1

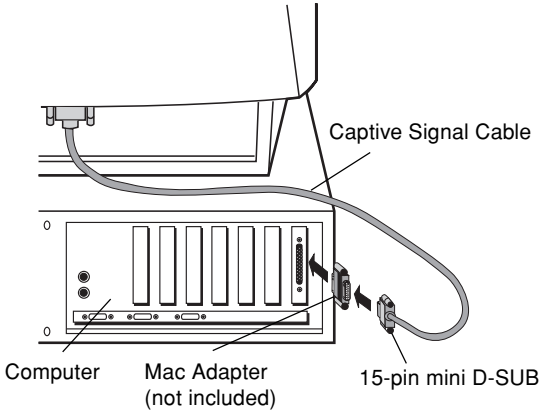

Figure B.1

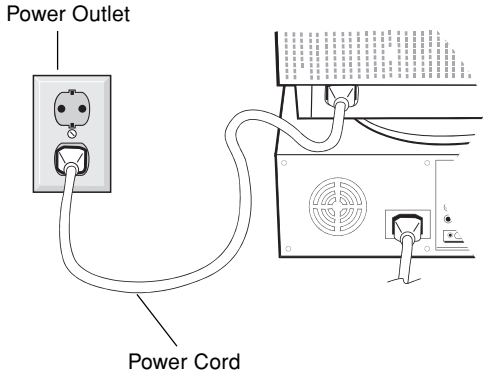

Figure C.1

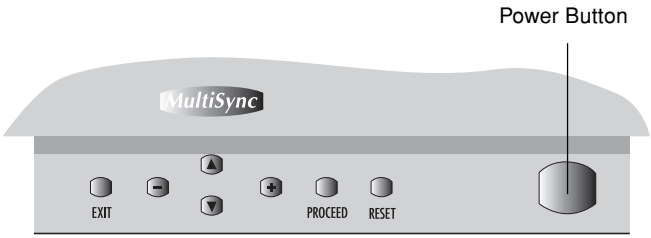

Figure D.1

Controls

OSM (On-Screen Manager) control buttons on the front of the monitor function as follows:

	Main Menu	Sub-Menu
EXIT	Exits the OSM menu.	Exits to the OSM main menu.
CONTROL ▲/▼	Moves the highlighted area up/down to select one of the controls.	Moves the highlighted area up/down to select one of the controls.
CONTROL -/+	Moves highlighted area left/right to select one of the controls.	Moves the bar in the - or + direction to decrease or increase the adjustment.
PROCEED	Has no function.	Only executes control or enters sub-menu.
RESET	Resets all the controls within the highlighted menu to the factory setting.	Resets the highlighted control to the factory setting.

NOTE: When **RESET** is pressed in the main and sub-menu, a warning window will appear allowing you to cancel the reset function.

When OSM controls are activated, icons are displayed at the top of the menu. If an arrow (→) is displayed in a sub-menu, it indicates further choices are available. To enter a sub-menu, press **PROCEED**.

☼◑ Brightness/Contrast Controls

Brightness: Adjusts the overall image and background screen brightness.

Contrast: Adjusts the image brightness in relation to the background.

Degauss: Eliminates the build-up of stray magnetic fields which alter the correct scan of the electron beams and affect the purity of the screen colours, focus, and convergence. When activated, your screen image will jump and waver a bit as the screen is demagnetised.

Caution: Please allow a minimum of 20 minutes to elapse between uses of the Degauss function.

Size and Position Controls

Left/Right: Moves the image horizontally (left or right).

Down/Up: Moves the image vertically (up or down).

Narrow/Wide: Decreases or increases the horizontal size of the image.

Short/Tall: Decreases or increases the vertical size of the image.

Color Control/Color Control System

Color presets 1 through 5 selects the desired color setting. The bar is replaced by the color setting choice. Each color setting is adjusted at the factory to the stated Kelvin. If a setting is adjusted, the name of the setting will change from Kelvin to Custom.

Red, Green, Blue: AccuColor Control System decreases or increases the monitor's red, green or blue color guns depending upon which is selected. The change in color will appear on screen and the direction (decrease or increase) will be shown by the bars.

sRGB Mode: sRGB mode provides the suitable color managed picture image. You can not change Contrast, Brightness, Red, Green and Blue colors individually.

Geometry Controls

Geometry Controls Menu

The **Geometry** controls allow you to adjust the curvature or angle of the sides of your display.

Sides In/Out (pincushion): Decreases or increases the curvature of the sides either inward or outward.

Sides Left/Right (pincushion balance): Decreases or increases the curvature of the sides either to the left or right.

Sides Tilt (parallelogram): Decreases or increases the tilt of the sides either to the left or right.

Sides Align (trapezoidal): Decreases or increases the bottom of the screen to be the same as the top.

Rotate (raster rotation): Rotates the entire display clockwise or counterclockwise.

Size and Position Controls

Left/Right: Moves the image horizontally (left or right).

Down/Up: Moves the image vertically (up or down).

Narrow/Wide: Decreases or increases the horizontal size of the image.

Short/Tall: Decreases or increases the vertical size of the image.

Color Control/Color Control System

Color presets 1 through 5 selects the desired color setting. The bar is replaced by the color setting choice. Each color setting is adjusted at the factory to the stated Kelvin. If a setting is adjusted, the name of the setting will change from Kelvin to Custom.

Red, Green, Blue: AccuColor Control System decreases or increases the monitor's red, green or blue color guns depending upon which is selected. The change in color will appear on screen and the direction (decrease or increase) will be shown by the bars.

sRGB Mode: sRGB mode provides the suitable color managed picture image. You can not change Contrast, Brightness, Red, Green and Blue colors individually.

Geometry Controls

Geometry Controls Menu

The **Geometry** controls allow you to adjust the curvature or angle of the sides of your display.

Sides In/Out (pincushion): Decreases or increases the curvature of the sides either inward or outward.

Sides Left/Right (pincushion balance): Decreases or increases the curvature of the sides either to the left or right.

Sides Tilt (parallelogram): Decreases or increases the tilt of the sides either to the left or right.

Sides Align (trapezoidal): Decreases or increases the bottom of the screen to be the same as the top.

Rotate (raster rotation): Rotates the entire display clockwise or counterclockwise.

Auto Save: The monitor automatically saves the last settings of the user controls. You can turn this Auto Save feature off by selecting this menu and changing the off position. When the off mode is selected, you will prompted with the option to save or return to the previous setting once you select a different control. If the save is not confirmed, the setting will go back to the previous setting when OSM is turned off.

Factory Preset: Selecting Factory Preset allows you a reset most OSM control settings back to the factory settings. A warning statement will appear to confirm that you do want to reset ALL settings. Individual settings can be reset by high-lighting the control to be reset and pressing the **RESET** button.

Tools 2

Language: OSM controls menus are available in six languages.

OSM Position: You can choose where you would like the OSM controls menu to appear on your screen. Selecting OSM Position allows you to manually adjust the OSM controls menu position from among Center, Top left, Top right, Bottom left and Bottom right.

OSM Turn Off: The OSM controls menu will stay on as long as it is in use. In the OSM Turn Off sub-menu, you can select how long the monitor waits after the last touch of a button for the OSM controls menu to disappear. The preset choices are 10, 20, 30, 45, 60 and 120 seconds.

OSM Lock Out: This control completely locks out access to all OSM controls functions except Brightness and Contrast. When attempting to activate OSM controls while in the lock out mode, a screen will appear indicating that OSM controls are locked out. To activate the OSM Lock Out function, press PROCEED, then press ▲ and hold down simultaneously. To deactivate the OSM Lock Out, press PROCEED, then press ▲ and hold down simultaneously.

IPM System Off Mode:

Enable: The IPM System works normally and all stages of energy savings are utilized.

Disable: The Off Mode of the IPM System is not used.

NOTE: For standard systems and graphics boards, keep the factory setting at ENABLE.

❶ Information

Display Mode: Indicates the current mode and frequency setting of the monitor.

Monitor Info: Indicates the model and serial numbers of your monitor.

Refresh Notifier: A message will advise you if the refresh rate of the signal being applied to the monitor by the computer is too low. For further information, please refer to your display card or system manual.

Recommended use

Safety Precautions and Maintenance:

FOR OPTIMUM PERFORMANCE, PLEASE NOTE THE FOLLOWING WHEN SETTING UP AND USING THE MULTISYNC FE1250+ COLOR MONITOR:

- **DO NOT OPEN THE MONITOR.** There are no user serviceable parts inside and opening or removing covers may expose you to dangerous shock hazards or other risks. Refer all servicing to qualified service personnel.
- Do not spill any liquids into the cabinet or use your monitor near water.
- Do not insert objects of any kind into the cabinet slots, as they may touch danger-ous voltage points, which can be harmful or fatal or may cause electric shock, fire or equipment failure.
- Do not place any heavy objects on the power cord. Damage to the cord may cause shock or fire.
- Do not place this product on a sloping or unstable cart, stand or table, as the monitor may fall, causing serious damage to the monitor.
- Keep the monitor away from high capacity transformers, electric motors and other devices such as external speakers or fans, which may create strong magnetic fields.
- If possible, position the monitor so that it is facing the east to minimize the effects of the earth's magnetic field.
- Changing the direction of the monitor while it is powered on may cause image discoloration. To correct this, turn the monitor off for 20 minutes before powering it back on.
- When operating the MultiSync FE1250+ with its AC 100-120/220-240V worldwide power supply, use a power supply cord that matches the power supply voltage of the AC power outlet being used. The power supply cord you use must have been ap-proved by and comply with the safety standards of your country. (Type H05VV-F should be used except in UK)
- In UK, use a BS-approved power cord with molded plug having a black (5A) fuse installed for use with this monitor. If a power cord is not supplied with this monitor, please contact your supplier.

Immediately unplug your monitor from the wall outlet and refer servicing to qualified service personnel under the following conditions:

- When the power supply cord or plug is damaged.
- If liquid has been spilled, or objects have fallen into the monitor.
- If the monitor has been exposed to rain or water.
- If the monitor has been dropped or the cabinet damaged.
- If the monitor does not operate normally by following operating instructions.

CAUTION

- Allow adequate ventilation around the monitor so that heat can properly dissipate. Do not block ventilated openings or place the monitor near a radiator or other heat sources. Do not put anything on top of monitor.
- The power cable connector is the primary means of detaching the system from the power supply. The monitor should be installed close to a power outlet which is easily accessible.
- Handle with care when transporting. Save packaging for transporting.

CORRECT PLACEMENT AND ADJUSTMENT OF THE MONITOR CAN REDUCE EYE, SHOULDER AND NECK FATIGUE. CHECK THE FOLLOWING WHEN YOU POSITION THE MONITOR:

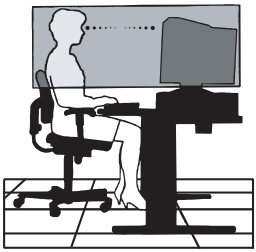

- Adjust the monitor height so that the top of the screen is at or slightly below eye level. Your eyes should look slightly downward when viewing the middle of the screen.
- Position your monitor no closer than 40 cm and no further away than 60 cm from your eyes. The optimal distance is 70 cm.
- Rest your eyes periodically by focusing on an object at least 6 m away. Blink often.
- Position the monitor at a 90° angle to windows and other light sources to minimize glare and reflections. Adjust the monitor tilt so that ceiling lights do not reflect on your screen.
- If reflected light makes it hard for you to see your screen, use an anti-glare filter.
- Clean your monitor regularly. Use a lint-free, non-abrasive cloth and a non-alcohol, neutral, non-abrasive cleaning solution or glass cleaner to minimize dust.
- Adjust the monitor's brightness and contrast controls to enhance readability.
- Use a document holder placed close to the screen.
- Position whatever you are looking at most of the time (the screen or reference material) directly in front of you to minimize turning your head while you are typing.
- Get regular eye checkups.

Ergonomics

To realize the maximum ergonomics benefits, we recommend the following:

- Adjust the Brightness until the background raster disappears
- Do not position the Contrast control to its maximum setting
- Use the preset Size and Position controls with standard signals
- Use the preset Color Setting and Sides Left/Right controls
- Use non-interlaced signals with a vertical refresh rate between 75-160Hz
- Do not use primary color blue on a dark background, as it is difficult to see and may produce eye fatigue due to insufficient contrast

Specifications

Monitor Specifications		MultiSync FE1250+	Notes
Picture Tube	Diagonal: Viewable Image Size:	55 cm/22 inch 50.8 cm/20 inch	90° deflection, 0.24 mm grill pitch, medium short persistence phosphor, aperture grille CRT, multi-layered, anti-static screen coating, dark-tint screen and OptiClear screen.
Input Signal	Video: Sync:	ANALOG 0.7 Vp-p/75 Ohms Separate sync. TTL Level Horizontal sync. (Positive/Negative; TTL Level) Vertical sync. (Positive/Negative; TTL Level) Composite sync. (Positive/Negative; TTL Level)	
Display Colours	Analog input:	Unlimited number of Colours	Depends on display card used.
Synchronization Range	Horizontal: Vertical:	30 kHz to 110 kHz 50 Hz to 160 Hz	Automatically Automatically
Resolutions Supported Resolution based on horizontal and vertical frequencies only		640 x 480 @ 60 to 160 Hz 800 x 600 @ 55 to 160 Hz 832 x 624 @ 55 to 160 Hz 1024 x768 @ 55 to 136 Hz 1152 x 870 @ 55 to 120 Hz 1280 x 1024 @ 55 to 102 Hz 1600 x 1200 @ 55 to 88 Hz..... 1792 x 1344 @ 55 to 78 Hz 1800 x 1440 @ 55 to 73 Hz 1856 x 1392 @ 55 to 75 Hz 1920 x 1440 @ 55 to 73 Hz	Some systems may not support all modes listed. NEC cites recommended resolution at 85 Hz for optimal display performance.
Active Display Area (Factory setting)	Horizontal: Vertical:	396 mm 297 mm	Dependent upon signal timing used, and does not include border area.
Active Display Area (Full scan)		406 mm 305 mm	Dependent upon signal timing used, and does not include border area.
Power Supply		AC 100-120/220-240 V @ 50/60 Hz	
Current Rating		1.3A@100-120V, 0.6A@220-240V	
Dimensions		495 mm (W) x 493.5 mm (H) x 473 mm (D) 19.8" (W) x 19.7" (H) x 18.9" (D)	
Weight		29.7 kg/65.5 lbs	
Environmental Considerations	Operating Temperature: Humidity: Altitude: Storage Temperature: Humidity: Altitude:	10 °C to +35 °C 30% to 80% 0 to 3000 m -20 °C to +60 °C 10% to 90% 0 to 15000 m	

NOTE: Technical specifications are subject to change without notice.

Features

Flat Aperture Grille CRT: Delivers an unparalleled viewing experience with a virtually flat image, eliminating distortion and reducing glare so that what you see on-screen is what you get on your printed output. The striped phosphor alignment of the CRT delivers superior vertical definition with improved bright-ness for more uniform image contrast.

OptiClear Screen Surface: Reduces reflection and glare and increases contrast without sacrificing focus level, clarity or brightness. Along with the flat square technology CRT, a high contrast screen with 0.24 mm grille pitch delivers crisp, clean text and graphics.

Dual Dynamic Beam Focus: Provides precise, continuous focus adjustments of the electron beams and optimum image quality, even to the far edges of the screen.

Color Control System: Allows you to change between five color settings on your display to match your personal preference.

OSM (On-Screen Manager) Controls: Allows you to quickly and easily adjust all elements of your screen image via simple to use on-screen menus.

ErgoDesign Features: Enhances human ergonomics to improve the working environment, protect the health of the user and save money. Examples include OSM controls for quick and easy image adjustments, tilt/swivel base for pre-ferred angle of vision and compliance with MPRII guidelines for lower emissions.

Plug and Play: The Microsoft® solution with the Windows® 95/98/2000 operating system facilitates setup and installation by allowing the monitor to send its capabilities (such as screen size and resolutions supported) directly to your computer, automatically optimizing display performance.

IPM (Intelligent Power Manager) System: Provides innovative power-saving methods that allow the monitor to shift to a lower power consumption level when on but not in use, saving two-thirds of your monitor energy costs, reducing emissions and lowering the air conditioning costs of the workplace.

Reduced Magnetic Field Technology: Reduces magnetic and alternating electric field emissions and static electricity, addressing ergonomic concerns regarding potential risks from extended computer monitor use.

Multiple Frequency Technology: Automatically adjusts monitor to the display card's scanning frequency, thus displaying the resolution required.

FullScan Capability: Allows you to use the entire screen area in most resolutions, significantly expanding image size.

GlobalSync/Corner Purity Control: Allows you to easily adjust impurities in the four corners of your monitor.

GTF Auto Adjust: Allows you to easily and quickly adjust the suitable horizontal and vertical size and position settings.

Convergence Control: Allows you to adjust the horizontal and vertical convergence of the top and bottom area to ensure that a white line drawn on the screen is as crisp and clear as possible.

Troubleshooting

No picture

- Display card should be completely seated in its slot.
- Power Button and computer power switch should be in the ON position.
- Signal cable should be completely connected to display card/ computer.
- Check connector for bent or pushed-in pins.

Image is scrolling or unstable

- Signal cable should be completely attached to the computer.
- Check pin assignments and signal timings of the monitor and your display card with respect to recommended timings and pin assignments.
- If the Macintosh cable adapter is used, check for proper connection or make sure the display card is Macintosh compatible and that the card is properly seated in the computer.

LED on monitor is not lit (no green or orange color can be seen)

- Power Switch should be in the ON position and power cord should be connected.

Picture is fuzzy or color looks blotchy

- If the picture is fuzzy, adjust the Moire Canceler Control. If the color looks blotchy, adjust the Brightness, Contrast or GlobalSync Controls, or use the EdgeLock control to change modes.
- Access the Degauss Control through OSM controls. Activate the Degauss Control.

CAUTION: A minimum interval of 20 minutes should elapse before the Deguass Control is used a second time when not switching between modes.

Picture bounces or a wavy pattern is present in the picture

- Move electrical devices that may be causing electrical interference away from the monitor.

Edges of the display image are not square

- Use the OSM Geometry Controls to straighten the edges.
- If possible, position the front of the monitor facing east.

Display image is not centered, too small, or too large

- Use the OSM Size and Position Controls to adjust the image.

Thin horizontal lines appear on your screen

- Thin horizontal lines are normal for an aperture grille CRT and are not a malfunction. These are shadows from the damper wires used to stabilize the aperture grille and are most noticeable when the screen's background is light (usually white).

Black vertical lines are visible on the screen

- Thin vertical black lines on one or both sides of the screen. This minor condition is caused by grille element overlap which can occur during shipping.
- Position an open white window over the affected area of the screen and maximize the brightness and contrast controls. This will cause localized heating of the overlap which will clear in a few minutes. Be sure to readjust the brightness and contrast controls back to the normal viewing level after this procedure.

ALL PARTS LIST

MODEL NO.: FE1250+(NSV1117STTKW)

SYMBOL NO.	PART NO.	DESCRIPTION/SPECIFICATION	
*** SURGE-ABSORBER ***			
AG200B	CP252P001 06	SURGE-ABSORBER	DSP-301N-C04F
AG200G	CP252P001 06	SURGE-ABSORBER	DSP-301N-C04F
AG200R	CP252P001 06	SURGE-ABSORBER	DSP-301N-C04F
AG205S	CP252P005 02	SURGE-ABSORBER	AG15PC152FB-K2M
AG701	CP252P001 02	SURGE-ABSORBER	DSP-201M
AG702	CP252P005 02	SURGE-ABSORBER	AG15PC152FB-K2M
*** CAPACITOR ***			
C 100	CP182P165 04	C-ELECTROLYTIC	CE04W 50V 4.7M-M
C 103	CP172P401 07	C-POLYESTER	50V 1.0M-J
C 104	CP182P165 01	C-ELECTROLYTIC	CE04W 50V 1M-M
C 105	CP182P165 01	C-ELECTROLYTIC	CE04W 50V 1M-M
C 106	CP182P165 01	C-ELECTROLYTIC	CE04W 50V 1M-M
C 107	CP182P165 01	C-ELECTROLYTIC	CE04W 50V 1M-M
C 108	QX142P020 09	C-CERAMIC	B50V 1000P-K 102 SO
C 109	QX142P020 09	C-CERAMIC	B50V 1000P-K 102 SO
C 110	CP182P162 04	C-ELECTROLYTIC	CE04W 16V 100M-M
C 111	QX142P020 09	C-CERAMIC	B50V 1000P-K 102 SO
C 112	CP182P165 01	C-ELECTROLYTIC	CE04W 50V 1M-M
C 113	CP172P401 07	C-POLYESTER	50V 1.0M-J
C 114	CP172P401 07	C-POLYESTER	50V 1.0M-J
C 117	QX142P020 09	C-CERAMIC	B50V 1000P-K 102 SO
C 121	CP182P165 04	C-ELECTROLYTIC	CE04W 50V 4.7M-M
C 123	QX155P235 03	C-CERAMIC	CH50V 10P-D
C 124	QX155P235 03	C-CERAMIC	CH50V 10P-D
C 131	CP182P162 04	C-ELECTROLYTIC	CE04W 16V 100M-M
C 132	QX142P020 09	C-CERAMIC	B50V 1000P-K 102 SO
C 135	CP182P165 04	C-ELECTROLYTIC	CE04W 50V 4.7M-M
C 136	QX142P020 09	C-CERAMIC	B50V 1000P-K 102 SO
C 137	QX142P020 05	C-CERAMIC	B50V 470P-K 471 SO
C 139	QX155P313 06	C-CERAMIC	SL50V 100P-J 101 SO
C 140	QX155P313 06	C-CERAMIC	SL50V 100P-J 101 SO
C 203H	QX142P023 08	C-CERAMIC	BF50V 0.01M-Z
C 205S	CP155P011 09	C-CERAMIC	B2KV 1000P-K
C 210B	CP172P201 01	C-M-POLYESTER	ECQ-E2104JF OR RJF
C 210G	CP172P201 01	C-M-POLYESTER	ECQ-E2104JF OR RJF
C 210R	CP172P201 01	C-M-POLYESTER	ECQ-E2104JF OR RJF
C 211B	QX155P312 08	C-CERAMIC	SL50V 47P-J 470 SO
C 211G	QX155P312 08	C-CERAMIC	SL50V 47P-J 470 SO
C 211R	QX155P312 08	C-CERAMIC	SL50V 47P-J 470 SO
C 221B	CP182P182 05	C-ELECTROLYTIC-NP	04W 25V 4.7M-M NP 5X11
C 221G	CP182P182 05	C-ELECTROLYTIC-NP	04W 25V 4.7M-M NP 5X11
C 221R	CP182P182 05	C-ELECTROLYTIC-NP	04W 25V 4.7M-M NP 5X11
C 250B	CP182P172 00	C-ELECTROLYTIC	04W 200V 0.47M-M/Q 6.3X11
C 250G	CP182P172 00	C-ELECTROLYTIC	04W 200V 0.47M-M/Q 6.3X11
C 250R	CP182P172 00	C-ELECTROLYTIC	04W 200V 0.47M-M/Q 6.3X11
C 251B	QX142P023 08	C-CERAMIC	BF50V 0.01M-Z
C 251G	QX142P023 08	C-CERAMIC	BF50V 0.01M-Z
C 251R	QX142P023 08	C-CERAMIC	BF50V 0.01M-Z
C 260	CP182P172 03	C-ELECTROLYTIC	04W 200V 3.3M-M/Q 6.3X11
C 261	QX142P023 08	C-CERAMIC	BF50V 0.01M-Z
C 262	CP182P162 04	C-ELECTROLYTIC	CE04W 16V 100M-M
C 265	QX142P023 08	C-CERAMIC	BF50V 0.01M-Z
C 280	CP182P162 03	C-ELECTROLYTIC	CE04W 16V 47M-M
C 281	CP182P197 05	C-ELECTROLYTIC	04W 100V 22M-M 6.3X11
C 284	QX142P023 08	C-CERAMIC	BF50V 0.01M-Z
C 285	CP182P314 04	C-ELECTROLYTIC	25V 220M-M 8X11.5
C 286	CP182P162 04	C-ELECTROLYTIC	CE04W 16V 100M-M
C 287	CP182P162 03	C-ELECTROLYTIC	CE04W 16V 47M-M
C 288	QX142P023 08	C-CERAMIC	BF50V 0.01M-Z

ALL PARTS LIST

MODEL NO.: FE1250+(NSV1117STTKW)

SYMBOL NO.	PART NO.	DESCRIPTION/SPECIFICATION	
C 289	CP172P400 04	C-POLYESTER	50V 0.1M-J
C 290	QX142P023 08	C-CERAMIC	BF50V 0.01M-Z
C 2C0	QX142P023 08	C-CERAMIC	BF50V 0.01M-Z
C 2D0	QX155P315 02	C-CERAMIC	SL50V 470P-J
C 2D1	CP172P400 04	C-POLYESTER	50V 0.1M-J
C 2D2	CP182P165 01	C-ELECTROLYTIC	CE04W 50V 1M-M
C 2D4	QX142P020 07	C-CERAMIC	B50V 680P-K 681 SO
C 2D5	CP182P162 05	C-ELECTROLYTIC	CE04W 16V 220M-M
C 2D6	QX142P023 08	C-CERAMIC	BF50V 0.01M-Z
C 2H0	QX155P232 03	C-CERAMIC	CH50V 33P-J 330 SO
C 2H1	QX142P023 08	C-CERAMIC	BF50V 0.01M-Z
C 2H2	CP182P162 03	C-ELECTROLYTIC	CE04W 16V 47M-M
C 2P0	QX142P023 08	C-CERAMIC	BF50V 0.01M-Z
C 2P1	QX142P023 08	C-CERAMIC	BF50V 0.01M-Z
C 2P2	QX142P023 08	C-CERAMIC	BF50V 0.01M-Z
C 2P4	QX142P023 08	C-CERAMIC	BF50V 0.01M-Z
C 2P6	QX142P011 03	C-CERAMIC	B500V 1000P-K 102 SO
C 2P8	QX142P011 03	C-CERAMIC	B500V 1000P-K 102 SO
C 2V0	QX155P232 03	C-CERAMIC	CH50V 33P-J 330 SO
C 2W2	QX155P233 05	C-CERAMIC	CH50V 100P-J 101 SO
C 2W3	QX155P233 05	C-CERAMIC	CH50V 100P-J 101 SO
C 451	CP182P163 08	C-ELECTROLYTIC	CE04W 25V 1000M-M
C 452	CP182P163 08	C-ELECTROLYTIC	CE04W 25V 1000M-M
C 453	QX142P020 05	C-CERAMIC	B50V 470P-K 471 SO
C 454	CP182P165 09	C-ELECTROLYTIC	CE04W 50V 100M-M
C 455	CP173P231 08	C-POLY	100V 224-J
C 456	QX142P020 05	C-CERAMIC	B50V 470P-K 471 SO
C 457	QX142P020 05	C-POLYESTER	50V 1500P-J 152 SO
C 458	QX142P020 05	C-CERAMIC	B50V 470P-K 471 SO
C 502	CP172P401 03	C-POLYESTER	50V 0.47M-J
C 503	CP172P130 09	C-POLYESTER	50V 0.022M-K-OR-J 223 SO
C 504	CP172P401 03	C-POLYESTER	50V 0.47M-J
C 505	CP182P163 07	C-ELECTROLYTIC	CE04W 25V 470M-M
C 506	QX142P011 07	C-CERAMIC	B500V 2200P-K 222 SO
C 507	CP182P162 03	C-ELECTROLYTIC	CE04W 16V 47M-M
C 550	CP173P251 07	C-M-PP	1800V 4900P-H
C 560	QX142P011 01	C-CERAMIC	B500V 680P-K 681 SO
C 561	QX142P010 09	C-CERAMIC	B500V 470P-K 471 SO
C 563	CP173P141 02	C-M-PP	DHSM204 250V 134JTP
C 564	CP173P141 02	C-M-PP	DHSM204 250V 134JTP
C 565	CP173P193 06	C-M-PP	250V 105-J
C 566	CP173P193 08	C-M-PP	250V 125-J
C 567	CP173P191 08	C-M-PP	250V 224-J
C 568	CP173P192 09	C-M-PP	250V 564-J
C 569	CP173P190 09	C-M-PP	250V 104-J
C 570	CP173P190 05	C-M-PP	250V 683-J
C 577	CP182P164 05	C-ELECTROLYTIC	CE04W 35V 47M-M
C 578	CP182P165 04	C-ELECTROLYTIC	CE04W 50V 4.7M-M
C 590	CP155P025 01	C-CERAMIC	R2KV 220P-K
C 591	CP155P030 04	C-CERAMIC	R250V 3300P-K
C 5A1	CP182P161 08	C-ELECTROLYTIC	CE04W 10V 1000M-M
C 5A2	CP182P161 08	C-ELECTROLYTIC	CE04W 10V 1000M-M
C 5C0	CP182P162 03	C-ELECTROLYTIC	CE04W 16V 47M-M
C 5C1	QX142P023 08	C-CERAMIC	BF50V 0.01M-Z
C 5C2	CP173P230 01	C-POLY	100V 103-J
C 5C3	CP172P401 06	C-POLYESTER	50V 0.82M-J
C 5C4	CP173P190 09	C-M-PP	250V 104-J
C 5C5	CP182P165 02	C-ELECTROLYTIC	CE04W 50V 2.2M-M
C 5C8	CP155P515 02	C-CERAMIC	CH50V 330P-J
C 5C9	QX155P231 07	C-CERAMIC	CH50V 18P-J

ALL PARTS LIST

MODEL NO.: FE1250+(NSV1117STTKW)

SYMBOL NO.	PART NO.	DESCRIPTION/SPECIFICATION	
C 5D0	CP172P134 08	C-POLYESTER	50V 680P-J 681 SO
C 5D1	CP172P137 03	C-POLYESTER	50V 1000P-J 102 SO
C 5D2	CP172P139 03	C-POLYESTER	50V 0.047M-J 473 SO
C 5F0	CP182P179 08	C-ELECTROLYTIC	04W 200V 47M-M/Q 12.5X20
C 5F1	CP182P172 06	C-ELECTROLYTIC	04W 200V 22M-M/Q 10X20
C 5G0	CP182P202 04	C-ELECTROLYTIC	04W 200V 3.3M-M 6.3X11
C 5G1	CP182P202 04	C-ELECTROLYTIC	04W 200V 3.3M-M 6.3X11
C 5G3	CP182P202 03	C-ELECTROLYTIC	04W 200V 2.2M-M 6.3X11
C 601	CP141P515 00	C-CERAMIC-CHIP	B 25V 104-K 2.0X1.25
C 602	CP182P162 04	C-ELECTROLYTIC	CE04W 16V 100M-M
C 603	CP141P514 01	C-CERAMIC-CHIP	B 50V 183-K
C 604	CP156P060 02	C-CER-CHIP	B50V 103-K
C 605	CP141P516 04	C-CERAMIC-CHIP	F 16V 105-Z 2.0X1.25
C 606	CP141P515 00	C-CERAMIC-CHIP	B 25V 104-K 2.0X1.25
C 607	CP156P060 02	C-CER-CHIP	B50V 103-K
C 608	CP182P162 04	C-ELECTROLYTIC	CE04W 16V 100M-M
C 609	CP156P060 02	C-CER-CHIP	B50V 103-K
C 611	CP156P060 02	C-CER-CHIP	B50V 103-K
C 612	CP182P161 07	C-ELECTROLYTIC	CE04W 10V 470M-M
C 613	CP156P060 02	C-CER-CHIP	B50V 103-K
C 614	CP156P060 02	C-CER-CHIP	B50V 103-K
C 615	CP141P511 07	C-CERAMIC-CHIP	B 50V 472-K 2.0X1.25
C 616	CP156P060 02	C-CER-CHIP	B50V 103-K
C 617	CP141P515 00	C-CERAMIC-CHIP	B 25V 104-K 2.0X1.25
C 618	CP141P515 00	C-CERAMIC-CHIP	B 25V 104-K 2.0X1.25
C 619	CP141P510 09	C-CERAMIC-CHIP	B 50V 102-K 2.0X1.25
C 620	CP182P161 07	C-ELECTROLYTIC	CE04W 10V 470M-M
C 621	CP182P162 03	C-ELECTROLYTIC	CE04W 16V 47M-M
C 622	CP141P514 06	C-CERAMIC-CHIP	B 50V 473-K
C 623	CP182P165 05	C-ELECTROLYTIC	CE04W 50V 10M-M
C 624	CP156P060 02	C-CER-CHIP	B50V 103-K
C 625	CP182P314 02	C-ELECTROLYTIC	25V 47M-M 5X11
C 626	CP156P060 02	C-CER-CHIP	B50V 103-K
C 627	CP141P516 04	C-CERAMIC-CHIP	F 16V 105-Z 2.0X1.25
C 628	CP141P517 03	C-C-CHIP	B25V 823-J 2.0X1.25
C 630	CP182P290 06	C-ELECTROLYTIC	6.3V 330M-M 8X7
C 631	CP156P060 02	C-CER-CHIP	B50V 103-K
C 632	CP141P515 00	C-CERAMIC-CHIP	B 25V 104-K 2.0X1.25
C 633	CP156P060 02	C-CER-CHIP	B50V 103-K
C 634	CP156P060 02	C-CER-CHIP	B50V 103-K
C 635	CP182P162 03	C-ELECTROLYTIC	CE04W 16V 47M-M
C 636	CP182P290 02	C-ELECTROLYTIC	6.3V 33M-M 5X7
C 638	CP156P053 04	C-CERAMIC-CHIP	CH50V 100P-J 1.6X0.8
C 639	CP156P053 04	C-CERAMIC-CHIP	CH50V 100P-J 1.6X0.8
C 6A1	QX142P023 08	C-CERAMIC	BF50V 0.01M-Z
C 6A2	QX142P023 08	C-CERAMIC	BF50V 0.01M-Z
C 6A3	QX142P023 08	C-CERAMIC	BF50V 0.01M-Z
C 6A4	QX142P023 08	C-CERAMIC	BF50V 0.01M-Z
C 6A5	QX142P023 08	C-CERAMIC	BF50V 0.01M-Z
C 6A6	QX142P023 08	C-CERAMIC	BF50V 0.01M-Z
C 6A7	QX142P023 08	C-CERAMIC	BF50V 0.01M-Z
C 6A9	QX142P023 08	C-CERAMIC	BF50V 0.01M-Z
C 6B3	CP182P165 05	C-ELECTROLYTIC	CE04W 50V 10M-M
C 6B4	CP182P165 05	C-ELECTROLYTIC	CE04W 50V 10M-M
C 6B5	QX142P020 05	C-CERAMIC	B50V 470P-K 471 SO
C 6B8	QX155P314 08	C-CERAMIC	SL50V 330P-J 331 SO
C 701	CP182P165 01	C-ELECTROLYTIC	CE04W 50V 1M-M
C 702	CP173P275 09	C-P-PP	630V 822-J OR K
C 703	CP173P275 04	C-P-PP	630V 222-J OR K
C 704	CP181P097 07	C-ELECTROLYTIC	04W 100V 220 M-M

ALL PARTS LIST

MODEL NO.: FE1250+(NSV1117STTKW)

SYMBOL NO.	PART NO.	DESCRIPTION/SPECIFICATION	
C 705	CP182P165 05	C-ELECTROLYTIC	CE04W 50V 10M-M
C 706	CP182P165 02	C-ELECTROLYTIC	CE04W 50V 2.2M-M
C 707	QX142P023 08	C-CERAMIC	BF50V 0.01M-Z
C 708	CP172P400 04	C-POLYESTER	50V 0.1M-J
C 709	QX142P023 08	C-CERAMIC	BF50V 0.01M-Z
C 710	QX142P023 08	C-CERAMIC	BF50V 0.01M-Z
C 711	CP182P270 06	C-ELE	6.3V 2200M-M 12.5X20
C 712	QX142P023 08	C-CERAMIC	BF50V 0.01M-Z
C 713	CP182P162 03	C-ELECTROLYTIC	CE04W 16V 47M-M
C 715	CP172P400 04	C-POLYESTER	50V 0.1M-J
C 716	CP173P042 09	C-M-POLYESTER	50V 0.22M-J SEKISOU
C 717	QX155P233 05	C-CERAMIC	CH50V 100P-J 101 SO
C 718	CP182P165 01	C-ELECTROLYTIC	CE04W 50V 1M-M
C 719	CP172P134 03	C-POLYESTER	50V 0.1M-K-OR-J 104 SO
C 720	QX155P313 00	C-CERAMIC	SL50V 56P-J 560 SO
C 721	CP172P139 06	C-POLYESTER	50V 0.068M-J 683 SO
C 722	CP173P043 00	C-M-POLYESTER	50V 0.27M-J SEKISOU
C 723	CP182P165 02	C-ELECTROLYTIC	CE04W 50V 2.2M-M
C 7A1	CP181P034 09	C-ELECTROLYTIC	04W 100V 47M-M
C 7A2	CP173P232 01	C-POLY	100V 334-J
C 7A3	QX142P010 09	C-CERAMIC	B500V 470P-K 471 SO
C 7A4	CP181P049 00	C-ELECTROLYTIC	04W 450V 2.2M-M
C 801	CP182P164 05	C-ELECTROLYTIC	CE04W 35V 47M-M
C 802	CP182P164 05	C-ELECTROLYTIC	CE04W 35V 47M-M
C 803	CP182P162 03	C-ELECTROLYTIC	CE04W 16V 47M-M
C 811	QX155P315 02	C-CERAMIC	SL50V 470P-J
C 812	QX142P023 08	C-CERAMIC	BF50V 0.01M-Z
C 815	QX142P023 08	C-CERAMIC	BF50V 0.01M-Z
C 816	QX155P315 02	C-CERAMIC	SL50V 470P-J
C 817	CP172P400 04	C-POLYESTER	50V 0.1M-J
C 818	CP172P400 04	C-POLYESTER	50V 0.1M-J
C 821	QX155P315 02	C-CERAMIC	SL50V 470P-J
C 822	QX142P023 08	C-CERAMIC	BF50V 0.01M-Z
C 825	QX142P023 08	C-CERAMIC	BF50V 0.01M-Z
C 826	QX155P315 02	C-CERAMIC	SL50V 470P-J
C 827	CP172P400 04	C-POLYESTER	50V 0.1M-J
C 828	CP172P400 04	C-POLYESTER	50V 0.1M-J
C 831	QX155P315 02	C-CERAMIC	SL50V 470P-J
C 837	CP172P400 04	C-POLYESTER	50V 0.1M-J
C 8A1	QX155P232 03	C-CERAMIC	CH50V 33P-J 330 SO
C 8A2	QX155P312 00	C-CERAMIC	SL50V 22P-J 220 SO
C 8A3	QX155P314 00	C-CERAMIC	SL50V 150P-J 151 SO
C 8B1	QX155P232 03	C-CERAMIC	CH50V 33P-J 330 SO
C 8B2	QX155P312 00	C-CERAMIC	SL50V 22P-J 220 SO
C 8B3	QX155P314 00	C-CERAMIC	SL50V 150P-J 151 SO
C 8C1	CP182P223 05	C-ELECTROLYTIC	CE04W 25V 220M-M 8X15
C 8C2	CP182P223 05	C-ELECTROLYTIC	CE04W 25V 220M-M 8X15
C 901	CP172P930 07	C-M-P	RE105-C
C 902	CP156P110 09	C-CERAMIC-AC	E 2200P-M-KX
C 903	CP156P110 09	C-CERAMIC-AC	E 2200P-M-KX
C 906	CP173P250 05	C-M-P	HCE450V 105K-SC-I
C 907	CP172P400 04	C-POLYESTER	50V 0.1M-J
C 908	CP172P401 05	C-POLYESTER	50V 0.68M-J
C 909	QX142P021 07	C-CERAMIC	B50V 4700P-K 472 SO
C 910	QX142P020 05	C-CERAMIC	B50V 470P-K 471 SO
C 911	CP185P040 01	C-ELE	450V 220M LI B45
C 913	CP172P073 06	C-M-P	DC630V 0.033M-K
C 914	CP182P164 05	C-ELECTROLYTIC	CE04W 35V 47M-M
C 915	QX142P020 05	C-CERAMIC	B50V 470P-K 471 SO
C 916	QX142P020 09	C-CERAMIC	B50V 1000P-K 102 SO

ALL PARTS LIST

MODEL NO.: FE1250+(NSV1117STTKW)

SYMBOL NO.	PART NO.	DESCRIPTION/SPECIFICATION	
C 917	QX155P233 05	C-CERAMIC	CH50V 100P-J 101 SO
C 918	QX142P020 09	C-CERAMIC	B50V 1000P-K 102 SO
C 919	CP172P400 04	C-POLYESTER	50V 0.1M-J
C 920	CP155P003 09	C-CERAMIC	SL2KV 220P-J
C 923	CP182P165 04	C-ELECTROLYTIC	CE04W 50V 4.7M-M
C 924	CP182P165 01	C-ELECTROLYTIC	CE04W 50V 1M-M
C 925	CP172P400 04	C-POLYESTER	50V 0.1M-J
C 940	CP182P194 02	C-ELECTROLYTIC	04W 35V 100M-M 6.3X11
C 941	CP172P400 04	C-POLYESTER	50V 0.1M-J
C 942	CP173P210 01	C-M-P	C630V 0.01M-J-OR-K
C 951	CP182P114 04	C-ELECTROLYTIC	250V 100M-M 16X31.5
C 952	CP182P319 01	C-ELECTROLYTIC	100V 82M-M 10X20
C 953	CP182P314 08	C-ELECTROLYTIC	25V 820M-M 10X23
C 954	CP182P314 08	C-ELECTROLYTIC	25V 820M-M 10X23
C 955	CP182P197 05	C-ELECTROLYTIC	04W 100V 22M-M 6.3X11
C 956	QX142P021 07	C-CERAMIC	B50V 4700P-K 472 SO
C 957	CP182P164 07	C-ELECTROLYTIC	CE04W 35V 220M-M
C 958	CP182P164 07	C-ELECTROLYTIC	CE04W 35V 220M-M
C 959	CP182P179 08	C-ELECTROLYTIC	04W 200V 47M-M/Q 12.5X20
C 971	CP182P311 07	C-ELECTROLYTIC	10V 470M-M 8X11.5
C 972	CP182P162 03	C-ELECTROLYTIC	CE04W 16V 47M-M
C 9A0	CP182P165 09	C-ELECTROLYTIC	CE04W 50V 100M-M
C 9A1	CP182P162 04	C-ELECTROLYTIC	CE04W 16V 100M-M
C 9A3	CP182P162 04	C-ELECTROLYTIC	CE04W 16V 100M-M
C 9A4	CP182P162 04	C-ELECTROLYTIC	CE04W 16V 100M-M
C 9A5	CP182P162 04	C-ELECTROLYTIC	CE04W 16V 100M-M
C 9A7	CP182P162 04	C-ELECTROLYTIC	CE04W 16V 100M-M
C 9A8	QX142P023 08	C-CERAMIC	BF50V 0.01M-Z
C 9A9	CP182P164 07	C-ELECTROLYTIC	CE04W 35V 220M-M
C 9B0	CP182P164 07	C-ELECTROLYTIC	CE04W 35V 220M-M
C 9B1	QX142P011 03	C-CERAMIC	B500V 1000P-K 102 SO
***** DIODE *****			
D 100	CP264P073 05	DIODE	HZ5C1 (DH)
D 104	CP264P073 07	DIODE	HZ5C3
D 105	CP264P073 07	DIODE	HZ5C3
D 106	CP264P073 05	DIODE	HZ5C1 (DH)
D 107	CP264P073 05	DIODE	HZ5C1 (DH)
D 108	CP264P073 05	DIODE	HZ5C1 (DH)
D 109	CP264P073 07	DIODE	HZ5C3
D 1A0	CP264P572 01	DIODE-LED	SMLS79723C
D 1A1	CP264P572 01	DIODE-LED	SMLS79723C
D 1A2	CP264P572 01	DIODE-LED	SMLS79723C
D 210B	CP264P320 01	DIODE	1SS244
D 210G	CP264P320 01	DIODE	1SS244
D 210R	CP264P320 01	DIODE	1SS244
D 211B	CP264P320 01	DIODE	1SS244
D 211G	CP264P320 01	DIODE	1SS244
D 211R	CP264P320 01	DIODE	1SS244
D 220B	CP264P470 01	DIODE	1SS133 T-72
D 220G	CP264P470 01	DIODE	1SS133 T-72
D 220R	CP264P470 01	DIODE	1SS133 T-72
D 221B	CP264P470 01	DIODE	1SS133 T-72
D 221G	CP264P470 01	DIODE	1SS133 T-72
D 221R	CP264P470 01	DIODE	1SS133 T-72
D 250B	CP264P320 01	DIODE	1SS244
D 250G	CP264P320 01	DIODE	1SS244
D 250R	CP264P320 01	DIODE	1SS244
D 251B	CP264P320 01	DIODE	1SS244
D 251G	CP264P320 01	DIODE	1SS244
D 251R	CP264P320 01	DIODE	1SS244

ALL PARTS LIST

MODEL NO.: FE1250+(NSV1117STTKW)

SYMBOL NO.	PART NO.	DESCRIPTION/SPECIFICATION	
D 260	CP264P470 01	DIODE	1SS133 T-72
D 261	CP264P470 01	DIODE	1SS133 T-72
D 262	CP264P470 01	DIODE	1SS133 T-72
D 263	CP264P470 01	DIODE	1SS133 T-72
D 2C0	CP264P470 01	DIODE	1SS133 T-72
D 2C1	CP264P470 01	DIODE	1SS133 T-72
D 2C2	CP264P075 04	DIODE	HZ7C2
D 2C3	CP264P075 04	DIODE	HZ7C2
D 2H0	CP264P075 04	DIODE	HZ7C2
D 2V0	CP264P075 04	DIODE	HZ7C2
D 451	CP264P499 01	DIODE	1N4005E-6580
D 452	CP264P073 05	DIODE	HZ5C1 (DH)
D 501	CP264P470 01	DIODE	1SS133 T-72
D 502	CP264P464 02	DIODE	SB560L-6511
D 550	CP264P465 01	DIODE	FMQ-G2FS
D 560	CP264P155 01	DIODE	RGP10G
D 561	CP264P124 01	DIODE	EU2A
D 5A1	CP264P250 02	DIODE	EGP10D STRAIGHT
D 5A2	CP264P250 02	DIODE	EGP10D STRAIGHT
D 5C0	CP264P250 02	DIODE	EGP10D STRAIGHT
D 5C1	CP264P470 01	DIODE	1SS133 T-72
D 5C2	CP264P470 01	DIODE	1SS133 T-72
D 5C3	CP264P470 01	DIODE	1SS133 T-72
D 5C6	CP264P470 01	DIODE	1SS133 T-72
D 5C7	QX330H509 09	SO-COPPER-WIRE	030N001 0.6
D 5F0	CP264P499 01	DIODE	1N4005E-6580
D 5F1	CP264P080 01	DIODE	HZ11A1
D 5F2	CP264P019 01	DIODE	EG-1
D 5G0	CP264P499 01	DIODE	1N4005E-6580
D 5G1	CP264P499 01	DIODE	1N4005E-6580
D 600	CP264P380 01	DIODE	1SS355TE-17
D 601	CP264P380 01	DIODE	1SS355TE-17
D 6A2	CP264P073 04	DIODE	HZ5B3
D 701	CP264P222 01	DIODE	UF5408
D 702	CP264P341 04	DIODE	UF4004
D 703	CP264P341 04	DIODE	UF4004
D 704	CP264P411 01	DIODE	ERA15-02
D 705	CP264P083 05	DIODE	HZ24-2
D 706	CP264P073 07	DIODE	HZ5C3
D 707	CP264P470 01	DIODE	1SS133 T-72
D 708	CP264P073 01	DIODE	HZ5A3
D 709	CP264P471 01	DIODE	CB903-4SV1
D 710	CP264P080 01	DIODE	HZ11A1
D 711	CP264P470 01	DIODE	1SS133 T-72
D 712	CP264P073 07	DIODE	HZ5C3
D 713	CP264P470 01	DIODE	1SS133 T-72
D 7A1	CP264P320 01	DIODE	1SS244
D 7A2	CP264P320 01	DIODE	1SS244
D 7A3	CP264P341 09	DIODE	UF4005-FORMING UF1JL-6396
D 901	CP264P567 01	DIODE	G5SBA60L-6088
D 902	CP264P477 01	DIODE	FMG-G26S
D 903	CP264P498 01	DIODE	RM10A
D 904	CP264P341 07	DIODE	UF4007
D 905	CP264P320 01	DIODE	1SS244
D 906	CP264P470 01	DIODE	1SS133 T-72
D 907	CP264P320 01	DIODE	1SS244
D 908	CP264P470 01	DIODE	1SS133 T-72
D 909	CP264P050 01	DIODE	HZ18-2
D 910	CP264P083 05	DIODE	HZ24-2
D 915	CP264P185 02	DIODE-ZENER	HZS16-3L

ALL PARTS LIST

MODEL NO.: FE1250+(NSV1117STTKW)

SYMBOL NO.	PART NO.	DESCRIPTION/SPECIFICATION	
D 917	CP264P320 01	DIODE	1SS244
D 918	CP264P498 01	DIODE	RM10A
D 940	CP264P563 04	DIODE	UG06D
D 941	CP264P341 07	DIODE	UF4007
D 951	CP264P341 07	DIODE	UF4007
D 952	CP264P564 01	DIODE	UF5406 19C2-406
D 953	CP264P400 01	DIODE	FMB-G19L
D 954	CP264P400 01	DIODE	FMB-G19L
D 955	CP264P470 01	DIODE	1SS133 T-72
D 956	CP264P470 01	DIODE	1SS133 T-72
D 957	CP264P470 01	DIODE	1SS133 T-72
D 960	CP264P470 01	DIODE	1SS133 T-72
D 971	CP264P478 01	DIODE	RK49
D 972	CP264P080 06	DIODE	HZ11B3
D 976	CP264P470 01	DIODE	1SS133 T-72
D 9A0	CP264P470 01	DIODE	1SS133 T-72
D 9A1	CP264P470 01	DIODE	1SS133 T-72
D 9A2	CP264P470 01	DIODE	1SS133 T-72
D 9A3	CP264P250 02	DIODE	EGP10D STRAIGHT
***** FUSE *****			
F 901	CP283P017 08	FUSE	215-T5.0AH 250V
***** IC *****			
IC101	CP263P345 02	IC-LINEAR	KIA7042AP
IC103	CP266P926 03	IC-MOS	ST72T771N9B1 NSV1117K
IC105	CP266P321 02	IC-MOS-EEPROM	BR24C16 (DH)
IC210	CP267P154 01	IC	LM2415T
IC211	CP263P263 02	IC	M52743BSP
IC212	CP263P351 01	IC-MOS	M35071-068SP
IC213	CP263P214 01	IC-LINEAR	KIA4559P
IC217	CP266P928 01	IC-MOS	24LC21/P/BR24C21
IC218	CP272P111 02	IC-FTTL	74F14PC
IC451	CP263P327 01	IC	LA7841
IC560	CP263P339 01	IC-MOS	SLA5070
IC5C0	CP263P265 01	IC	BA9757
IC601	CP267P151 01	IC	CP267P151-1
IC602	CP263P282 02	IC-REGULATOR	TA48M033F(TE16L) 3.3V
IC603	CP263P129 01	IC-LINEAR	BA4558F-E2
IC6A1	CP263P343 01	IC	TL084CN
IC6A2	CP263P214 01	IC-LINEAR	KIA4559P
IC6A3	CP263P344 01	IC-CMOS	74VHC14N
IC6A4	CP263P345 01	IC-LINEAR	KIA7027AP
IC701	CP263P328 01	IC	AN5751
IC702	CP263P214 01	IC-LINEAR	KIA4559P
IC801	CP263P300 01	IC	LA6510
IC802	CP263P300 01	IC	LA6510
IC803	CP263P300 01	IC	LA6510
IC8A1	CP267P128 01	HIC	STK391-110
IC901	CP263P269 01	IC	MC33262P
IC902	CP267P153 02	IC	STR-F6655 LF1359
IC903	CP263P337 01	IC	MIP0255SP
IC911	CP268P012 07	PHOTO-COUPLER	TCET1106(G)
IC912	CP268P012 07	PHOTO-COUPLER	TCET1106(G)
IC951	CP263P338 01	IC	SE-B3
IC9A0	CP263P340 01	IC-REG	KIA7812API
IC9A1	CP263P240 01	IC-REGULATOR	BA05T
IC9A2	CP263P342 01	IC	L88MS05T
***** CONNECTOR *****			
J 101	CP452P182 09	CONNECTOR-FFC	19FE-BT-VK-N (MI)
J 102	CP452C064 06	CONNECTOR-EH	B6B-EH (MI)
J 1A0	CP452C027 06	CONNECTOR-EH	S6B-EH (MI)

ALL PARTS LIST

MODEL NO.: FE1250+(NSV1117STTKW)

SYMBOL NO.	PART NO.	DESCRIPTION/SPECIFICATION		
J 200	CP449P024 01	SOCKET-CRT	CVT3280-5101	
J 201	CP452P283 01	CONNECTOR	TP00705-51	(MI)
J 211	CP452C064 06	CONNECTOR-EH	B6B-EH	(MI)
J 212	CP452P182 09	CONNECTOR-FFC	19FE-BT-VK-N	(MI)
J 215	CP452C070 01	CONNECTOR-D-SUB	NFN8715F	
J 450	CP452P247 03	CONNECTOR	B2P3-VH-B	(MI)
J 550	CP452P248 06	CONNECTOR	B6P-VH-B	(MI)
J 600	CP452P288 08	CONNECTOR-RF	RF-H164TD-1190-W1	(MI)
J 601	CP452P288 08	CONNECTOR-RF	RF-H164TD-1190-W1	(MI)
J 801	CP452C064 08	CONNECTOR-EH	B8B-EH	(MI)
J 802	QX452D109 02	CONNECTOR	B2B-XH-AM	
J 803	QX452D109 03	CONNECTOR	B3B-XH-AM	
J 8A1	QX452D109 04	CONNECTOR	B4B-XH-AM	
J 901	CP452P247 03	CONNECTOR	B2P3-VH-B	(MI)
J 902	CP442P001 01	FUSE-CLIP	TP00351-51	
J 903	CP442P001 01	FUSE-CLIP	TP00351-51	
J 904	CP452P247 03	CONNECTOR	B2P3-VH-B	(MI)
J 905	CP452C064 01	CONNECTOR-EH	B10B-EH	(MI)
J 906	CP452P314 03	CONNECTOR	B2P3-VH-B-E	(MI)
J 907	CP452D016 01	CONNECTOR-VH	B2P3S-VH	(MT)
J 9A0	CP452C064 01	CONNECTOR-EH	B10B-EH	(MI)
J 9A1	CP452C064 06	CONNECTOR-EH	B6B-EH	(MI)
***** FILTER, COIL *****				
L 200B	CP410P012 04	BEAD-FERRITE	FBR07UA850	
L 200G	CP410P012 04	BEAD-FERRITE	FBR07UA850	
L 200R	CP410P012 04	BEAD-FERRITE	FBR07UA850	
L 201B	CP325P020 04	COIL-PEAKING	0.27MH-K	R27
L 201G	CP325P020 04	COIL-PEAKING	0.27MH-K	R27
L 201R	CP325P020 04	COIL-PEAKING	0.27MH-K	R27
L 210B	CP325P020 02	COIL PEAKING	0.18MH-K	R18
L 210G	CP325P020 02	COIL PEAKING	0.18MH-K	R18
L 210R	CP325P020 02	COIL PEAKING	0.18MH-K	R18
L 280	CP410P012 01	BEAD-FERRITE	FBR07HA850	
L 281	CP410P012 01	BEAD-FERRITE	FBR07HA850	
L 282	CP325P023 05	COIL-PEAKING	100MH-K	101
L 2C0	CP410P012 01	BEAD-FERRITE	FBR07HA850	
L 2D0	CP325P023 01	COIL-PEAKING	47MH-K	470
L 2H0	CP410P012 01	BEAD-FERRITE	FBR07HA850	
L 2P0	CP410P012 01	BEAD-FERRITE	FBR07HA850	
L 2P1	CP410P012 01	BEAD-FERRITE	FBR07HA850	
L 2P2	CP410P012 01	BEAD-FERRITE	FBR07HA850	
L 2P3	CP325P072 05	COIL-PEAKING	100MH-K-OR-J	101
L 2P4	CP410P012 01	BEAD-FERRITE	FBR07HA850	
L 2P5	QX330H509 09	SO-COPPER-WIRE	030N001 0.6	
L 2P6	CP410P012 01	BEAD-FERRITE	FBR07HA850	
L 2P7	QX330H509 09	SO-COPPER-WIRE	030N001 0.6	
L 2V0	CP410P012 01	BEAD-FERRITE	FBR07HA850	
L 2W0	CP410P012 01	BEAD-FERRITE	FBR07HA850	
L 2W1	CP410P012 01	BEAD-FERRITE	FBR07HA850	
L 550	CP410P012 01	BEAD-FERRITE	FBR07HA850	
L 560	CP333P047 01	COIL-HORIZ-LIN	77A-0001	(MI)
L 561	CP321P032 01	COIL-RF	150MH-K	151 SO
L 5A1	CP321P411 01	COIL-CHOKE		(MI)
L 5C0	CP321P033 02	COIL-RF	1200MH-J	122 SO
L 5G0	CP321P032 09	COIL-RF	680MH-K	681 SO
L 5G1	CP321P033 01	COIL-RF	1000MH-J	102 SO
L 5G2	CP321P191 06	COIL-RF	2200MH-J	222
L 5G3	CP321P033 02	COIL-RF	1200MH-J	122 SO
L 600	CP410P072 05	FERRITE-CHIP	BLM21A601SPT	
L 601	CP410P072 05	FERRITE-CHIP	BLM21A601SPT	

ALL PARTS LIST

MODEL NO.: FE1250+(NSV1117STTKW)

SYMBOL NO.	PART NO.	DESCRIPTION/SPECIFICATION		
L 602	CP410P072 05	FERRITE-CHIP	BLM21A601SPT	
L 603	CP410P072 05	FERRITE-CHIP	BLM21A601SPT	
L 604	CP410P072 05	FERRITE-CHIP	BLM21A601SPT	
L 6A1	CP410P012 01	BEAD-FERRITE	FBR07HA850	
L 6A2	CP410P012 01	BEAD-FERRITE	FBR07HA850	
L 701	CP321P170 05	COIL-RF	3.3MH-L	3R3
L 702	CP321P170 05	COIL-RF	3.3MH-L	3R3
L 704	CP321P033 02	COIL-RF	1200MH-J	122 SO
L 705	CP410P012 01	BEAD-FERRITE	FBR07HA850	
L 8A1	CP321P031 09	COIL-RF	100MH-K	101 SO
L 8A2	CP321P031 09	COIL-RF	100MH-K	101 SO
L 901	CP351P072 01	LINE-FILTER	25060	(MI)
L 902	CP351P074 02	LINE-FILTER	SN10P-601JB	(MI)
L 903	CP321P431 01	TRANS-CHOKE	7101-0297	(MI)
L 904	CP410P012 03	BEAD-FERRITE	FBR07VB850	
L 951	CP321P031 05	COIL-RF	47MH-K	470 SO
L 952	CP321P030 08	COIL-RF	12MH-K	120 SO
L 953	CP321P030 08	COIL-RF	12MH-K	120 SO
L 954	CP321P031 05	COIL-RF	47MH-K	470 SO
L 971	CP321P031 05	COIL-RF	47MH-K	470 SO
L 9A0	CP321P031 09	COIL-RF	100MH-K	101 SO
L 9A1	CP410P012 01	BEAD-FERRITE	FBR07HA850	
L 9A2	CP321P030 08	COIL-RF	12MH-K	120 SO
L 9A3	CP321P030 08	COIL-RF	12MH-K	120 SO
R 451	CP321P031 09	COIL-RF	100MH-K	101 SO
***** TRANSISTOR *****				
Q 100	CP260P488 01	TRANSISTOR	KRA107M	
Q 102	CP260P490 01	TRANSISTOR	KRC110M-AT	
Q 103	CP260P490 01	TRANSISTOR	KRC110M-AT	
Q 104	CP260P490 01	TRANSISTOR	KRC110M-AT	
Q 250B	CP260P492 01	TRANSISTOR	2SD2651TZ	
Q 250G	CP260P492 01	TRANSISTOR	2SD2651TZ	
Q 250R	CP260P492 01	TRANSISTOR	2SD2651TZ	
Q 251B	CP260P491 01	TRANSISTOR	2SB1688TZ	
Q 251G	CP260P491 01	TRANSISTOR	2SB1688TZ	
Q 251R	CP260P491 01	TRANSISTOR	2SB1688TZ	
Q 260	CP260P489 05	TRANSISTOR	KRC120M	
Q 2C0	CP260P490 01	TRANSISTOR	KRC110M-AT	
Q 2C1	CP260P490 01	TRANSISTOR	KRC110M-AT	
Q 2C2	CP260P490 01	TRANSISTOR	KRC110M-AT	
Q 2C3	CP260P490 01	TRANSISTOR	KRC110M-AT	
Q 501	CP260P382 04	TRANSISTOR	2SC 5395-E.F	
Q 502	CP260P369 01	TRANSISTOR	2SC3202Y-AT	
Q 503	CP260P499 01	TRANSISTOR	2SA1270Y-AT	
Q 504	CP260P435 01	TRANSISTOR	2SD1815-T	
Q 550	CP260P431 04	TRANSISTOR	2SC5516	
Q 560	CP260P361 02	TRANSISTOR	2SD1740MR	
Q 561	CP260P452 01	TRANSISTOR	C1740S-R,S/C5395-E,F	
Q 5A1	CP260P479 01	TRANSISTOR	KTC2026-Y	
Q 5A2	CP260P480 01	TRANSISTOR	KTA1046-Y	
Q 5C2	CP260P368 01	TRANSISTOR	KRC102M-AT	
Q 5C3	CP260P368 01	TRANSISTOR	KRC102M-AT	
Q 5C4	CP260P452 01	TRANSISTOR	C1740S-R,S/C5395-E,F	
Q 5F0	CP260P334 02	TRANSISTOR	ET453MR-F143	
Q 5F1	CP260P486 02	MOS-FET	2SJ584LS-CB11	
Q 601	CP260P457 01	TRANSISTOR-CHIP	DTC124EK/RT1N241C319	
Q 602	CP260P454 01	TRANSISTOR-CHIP	C2412K-R,S/C3928A-R,	
Q 603	CP260P457 01	TRANSISTOR-CHIP	DTC124EK/RT1N241C319	
Q 604	CP260P457 01	TRANSISTOR-CHIP	DTC124EK/RT1N241C319	
Q 605	CP260P455 01	TRANSISTOR-CHIP	A1037K-R,S/A1530A-R,114-3/330-4	

ALL PARTS LIST

MODEL NO.: FE1250+(NSV1117STTKW)

SYMBOL NO.	PART NO.	DESCRIPTION/SPECIFICATION	
Q 701	CP260P384 02	MOS-FET	2SK2645-01MR-F111
Q 7A1	CP260P138 01	TRANSISTOR	2SC2240-GR
Q 7A2	CP260P424 01	TRANSISTOR	2SA970-GR
Q 7A3	CP260P138 01	TRANSISTOR	2SC2240-GR
Q 7A4	CP260P418 01	TRANSISTOR	KTA1659-Y
Q 7A5	CP260P417 01	TRANSISTOR	KTC4370-Y
Q 7A6	CP260P419 01	TRANSISTOR	2SC4620
Q 901	CP260P464 01	MOS-FET	2SK2148 FORMING
Q 902	CP260P461 01	TRANSISTOR	KRA224M
Q 903	CP260P368 01	TRANSISTOR	KRC102M-AT
Q 908	CP260P452 01	TRANSISTOR	C1740S-R,S/C5395-E,F
Q 909	CP260P452 01	TRANSISTOR	C1740S-R,S/C5395-E,F
Q 910	CP260P366 01	TRANSISTOR	2SA1266Y-AT
Q 951	CP260P488 01	TRANSISTOR	KRA107M
Q 952	CP260P368 01	TRANSISTOR	KRC102M-AT
Q 956	CP260P452 01	TRANSISTOR	C1740S-R,S/C5395-E,F
Q 9A0	CP260P012 02	TRANSISTOR	2SA1020-Y
Q 9A1	CP260P489 02	TRANSISTOR	KRC117M
***** RESISTOR *****			
C 846	CP103P018 00	R-CARBON	1/2WVS-1.0J
R 100	QX103P413 07	R-CARBON	1/4W 10K-J 103 RD-H
R 101	QX103P412 05	R-CARBON	1/4W 1K-J 102 RD-H
R 102	QX103P413 07	R-CARBON	1/4W 10K-J 103 RD-H
R 103	QX103P413 07	R-CARBON	1/4W 10K-J 103 RD-H
R 104	QX103P413 07	R-CARBON	1/4W 10K-J 103 RD-H
R 105	QX330H509 09	SO-COPPER-WIRE	030N001 0.6
R 106	QX103P413 07	R-CARBON	1/4W 10K-J 103 RD-H
R 107	QX103P413 07	R-CARBON	1/4W 10K-J 103 RD-H
R 108	QX330H509 09	SO-COPPER-WIRE	030N001 0.6
R 109	QX103P411 03	R-CARBON	1/4W 100-J 101 RD-H
R 110	QX103P411 03	R-CARBON	1/4W 100-J 101 RD-H
R 115	QX103P413 07	R-CARBON	1/4W 10K-J 103 RD-H
R 116	QX103P411 03	R-CARBON	1/4W 100-J 101 RD-H
R 117	QX103P413 07	R-CARBON	1/4W 10K-J 103 RD-H
R 119	QX103P411 03	R-CARBON	1/4W 100-J 101 RD-H
R 120	QX103P411 03	R-CARBON	1/4W 100-J 101 RD-H
R 124	QX103P413 03	R-CARBON	1/4W 4.7K-J 472 RD-H
R 125	QX103P413 03	R-CARBON	1/4W 4.7K-J 472 RD-H
R 126	QX103P413 03	R-CARBON	1/4W 4.7K-J 472 RD-H
R 127	QX103P413 03	R-CARBON	1/4W 4.7K-J 472 RD-H
R 128	QX103P413 03	R-CARBON	1/4W 4.7K-J 472 RD-H
R 129	QX103P413 03	R-CARBON	1/4W 4.7K-J 472 RD-H
R 133	QX103P411 03	R-CARBON	1/4W 100-J 101 RD-H
R 135	CP103P070 01	R-METAL-S	1/4W 100K-F 104 RN-H
R 136	CP103P067 03	R-METAL-S	1/4W 10K-F 103 RN-H
R 138	QX103P411 03	R-CARBON	1/4W 100-J 101 RD-H
R 139	QX103P413 07	R-CARBON	1/4W 10K-J 103 RD-H
R 140	QX103P416 01	R-CARBON	1/4W 1M-J 105 RD-H
R 141	QX103P413 07	R-CARBON	1/4W 10K-J 103 RD-H
R 142	QX103P411 03	R-CARBON	1/4W 100-J 101 RD-H
R 145	QX103P410 09	R-CARBON	1/4W 47-J 470 RD-H
R 147	QX103P410 09	R-CARBON	1/4W 47-J 470 RD-H
R 148	QX103P411 03	R-CARBON	1/4W 100-J 101 RD-H
R 149	QX103P413 07	R-CARBON	1/4W 10K-J 103 RD-H
R 150	QX330H509 09	SO-COPPER-WIRE	030N001 0.6
R 152	QX103P411 03	R-CARBON	1/4W 100-J 101 RD-H
R 153	CP103P066 05	R-METAL-S	1/4W 4.7K-F 472RN-H
R 154	QX103P411 03	R-CARBON	1/4W 100-J 101 RD-H
R 155	CP103P066 05	R-METAL-S	1/4W 4.7K-F 472RN-H
R 156	QX103P412 01	R-CARBON	1/4W 470-J 471 RD-H

ALL PARTS LIST

MODEL NO.: FE1250+(NSV1117STTKW)

SYMBOL NO.	PART NO.	DESCRIPTION/SPECIFICATION		
R 157	QX103P413 02	R-CARBON	1/4W 3.9K-J	392 RD-H
R 158	QX103P413 02	R-CARBON	1/4W 3.9K-J	392 RD-H
R 161	QX103P413 03	R-CARBON	1/4W 4.7K-J	472 RD-H
R 162	QX330H509 09	SO-COPPER-WIRE	030N001 0.6	
R 163	QX330H509 09	SO-COPPER-WIRE	030N001 0.6	
R 164	QX103P411 03	R-CARBON	1/4W 100-J	101 RD-H
R 165	QX103P411 03	R-CARBON	1/4W 100-J	101 RD-H
R 167	QX103P414 05	R-CARBON	1/4W 47K-J	473 RD-H
R 169	QX103P414 05	R-CARBON	1/4W 47K-J	473 RD-H
R 1A1	CP103P064 08	R-METAL-S	1/4W 910-F	911 RN-H
R 1A2	CP103P064 09	R-METAL-S	1/4W 1K-F	102 RN-H
R 1A3	CP103P063 07	R-METAL-S	1/4W 330-F	331 RN-H
R 1A4	CP103P064 09	R-METAL-S	1/4W 1K-F	102 RN-H
R 1A6	CP103P065 09	R-METAL-S	1/4W 2.7K-F	272 RN-H
R 1A7	CP103P064 02	R-METAL-S	1/4W 510-F	
R 1A8	CP103P065 09	R-METAL-S	1/4W 2.7K-F	272 RN-H
R 1B1	QX103P412 03	R-CARBON	1/4W 680-J	681 RD-H
R 1B2	QX103P412 03	R-CARBON	1/4W 680-J	681 RD-H
R 1B3	QX103P412 03	R-CARBON	1/4W 680-J	681 RD-H
R 1B4	QX103P411 06	R-CARBON	1/4W 180-J	181 RD-H
R 1B5	QX103P411 06	R-CARBON	1/4W 180-J	181 RD-H
R 1B6	QX103P411 06	R-CARBON	1/4W 180-J	181 RD-H
R 200B	CP103P410 07	R-CARBON	1/2W 33-J	
R 200G	CP103P410 07	R-CARBON	1/2W 33-J	
R 200R	CP103P410 07	R-CARBON	1/2W 33-J	
R 203H	CP103P418 01	R-CARBON	1/2W 1.2-J	
R 205S	CP103P411 07	R-CARBON	1/2W 220-J	
R 210B	CP103P411 03	R-CARBON	1/2W 100-J	
R 210G	CP103P411 04	R-CARBON	1/2W 120-J	
R 210R	CP103P411 03	R-CARBON	1/2W 100-J	
R 211B	QX103P410 05	R-CARBON	1/4W 22-J	220 RD-H
R 211G	QX103P410 09	R-CARBON	1/4W 47-J	470 RD-H
R 211R	QX103P410 05	R-CARBON	1/4W 22-J	220 RD-H
R 212B	QX103P412 05	R-CARBON	1/4W 1K-J	102 RD-H
R 212G	QX103P412 05	R-CARBON	1/4W 1K-J	102 RD-H
R 212R	QX103P412 05	R-CARBON	1/4W 1K-J	102 RD-H
R 214B	QX103P413 01	R-CARBON	1/4W 3.3K-J	332 RD-H
R 214G	QX103P413 01	R-CARBON	1/4W 3.3K-J	332 RD-H
R 214R	QX103P413 01	R-CARBON	1/4W 3.3K-J	332 RD-H
R 223B	QX103P411 03	R-CARBON	1/4W 100-J	101 RD-H
R 223G	QX103P411 03	R-CARBON	1/4W 100-J	101 RD-H
R 223R	QX103P411 03	R-CARBON	1/4W 100-J	101 RD-H
R 224B	CP103P062 02	R-METAL-S	1/4W 75-F	750RN-H
R 224G	CP103P062 02	R-METAL-S	1/4W 75-F	750RN-H
R 224R	CP103P062 02	R-METAL-S	1/4W 75-F	750RN-H
R 250B	QX103P415 02	R-CARBON	1/4W 180K-J	184 RD-H
R 250G	QX103P415 02	R-CARBON	1/4W 180K-J	184 RD-H
R 250R	QX103P415 02	R-CARBON	1/4W 180K-J	184 RD-H
R 251B	QX103P415 00	R-CARBON	1/4W 120K-J	124 RD-H
R 251G	QX103P415 00	R-CARBON	1/4W 120K-J	124 RD-H
R 251R	QX103P415 00	R-CARBON	1/4W 120K-J	124 RD-H
R 252B	QX103P414 01	R-CARBON	1/4W 22K-J	223 RD-H
R 252G	QX103P414 01	R-CARBON	1/4W 22K-J	223 RD-H
R 252R	QX103P414 01	R-CARBON	1/4W 22K-J	223 RD-H
R 253B	QX103P410 01	R-CARBON	1/4W 10-J	100 RD-H
R 253G	QX103P410 01	R-CARBON	1/4W 10-J	100 RD-H
R 253R	QX103P410 01	R-CARBON	1/4W 10-J	100 RD-H
R 254B	QX103P414 03	R-CARBON	1/4W 33K-J	333 RD-H
R 254G	QX103P414 03	R-CARBON	1/4W 33K-J	333 RD-H
R 254R	QX103P414 03	R-CARBON	1/4W 33K-J	333 RD-H

ALL PARTS LIST

MODEL NO.: FE1250+(NSV1117STTKW)

SYMBOL NO.	PART NO.	DESCRIPTION/SPECIFICATION
R 255B	QX103P414 01	R-CARBON 1/4W 22K-J 223 RD-H
R 255G	QX103P414 01	R-CARBON 1/4W 22K-J 223 RD-H
R 255R	QX103P414 01	R-CARBON 1/4W 22K-J 223 RD-H
R 256B	QX103P413 03	R-CARBON 1/4W 4.7K-J 472 RD-H
R 256G	QX103P413 03	R-CARBON 1/4W 4.7K-J 472 RD-H
R 256R	QX103P413 03	R-CARBON 1/4W 4.7K-J 472 RD-H
R 260	CP103P067 01	R-METAL-S 1/4W 8.2K-F 822 RN-H
R 261	CP103P066 09	R-METAL-S 1/4W 6.8K-F 682 RN-H
R 263	CP103P068 01	R-METAL-S 1/4W 22K-F 223RN-H
R 264	CP103P066 09	R-METAL-S 1/4W 6.8K-F 682 RN-H
R 267	CP103P068 01	R-METAL-S 1/4W 22K-F 223RN-H
R 268	CP103P068 00	R-METAL-S 1/4W 20K-F
R 269	QX103P411 03	R-CARBON 1/4W 100-J 101 RD-H
R 272	QX103P411 03	R-CARBON 1/4W 100-J 101 RD-H
R 280	CP103P064 07	R-METAL-S 1/4W 820-F 821 RN-H (DH)
R 281	CP103P065 07	R-METAL-S 1/4W 2.2K-F 222 RN-H
R 282	QX103P411 03	R-CARBON 1/4W 100-J 101 RD-H
R 283	CP103P067 07	R-METAL-S 1/4W 15K-F 153 RN-H
R 284	CP103P065 05	R-METAL-S 1/4W 1.8K-F 182 RN-H
R 285	QX103P411 03	R-CARBON 1/4W 100-J 101 RD-H
R 286	QX103P411 03	R-CARBON 1/4W 100-J 101 RD-H
R 288	QX330H509 09	SO-COPPER-WIRE 030N001 0.6
R 2C0	QX103P411 03	R-CARBON 1/4W 100-J 101 RD-H
R 2C1	QX103P411 03	R-CARBON 1/4W 100-J 101 RD-H
R 2C2	QX103P413 07	R-CARBON 1/4W 10K-J 103 RD-H
R 2C3	QX103P414 05	R-CARBON 1/4W 47K-J 473 RD-H
R 2C8	QX103P412 05	R-CARBON 1/4W 1K-J 102 RD-H
R 2C9	QX103P414 05	R-CARBON 1/4W 47K-J 473 RD-H
R 2D0	QX103P410 09	R-CARBON 1/4W 47-J 470 RD-H
R 2D1	QX103P410 09	R-CARBON 1/4W 47-J 470 RD-H
R 2D2	QX103P410 09	R-CARBON 1/4W 47-J 470 RD-H
R 2D3	QX103P410 01	R-CARBON 1/4W 10-J 100 RD-H
R 2D4	CP103P064 09	R-METAL-S 1/4W 1K-F 102 RN-H
R 2D5	QX103P410 01	R-CARBON 1/4W 10-J 100 RD-H
R 2D6	QX103P413 03	R-CARBON 1/4W 4.7K-J 472 RD-H
R 2H0	CP103P065 07	R-METAL-S 1/4W 2.2K-F 222 RN-H
R 2H1	QX103P410 09	R-CARBON 1/4W 47-J 470 RD-H
R 2V0	CP103P065 07	R-METAL-S 1/4W 2.2K-F 222 RN-H
R 2V1	QX103P410 09	R-CARBON 1/4W 47-J 470 RD-H
R 2W0	QX103P410 01	R-CARBON 1/4W 10-J 100 RD-H
R 2W1	QX103P410 01	R-CARBON 1/4W 10-J 100 RD-H
R 2W2	QX103P410 01	R-CARBON 1/4W 10-J 100 RD-H
R 2W3	QX103P410 01	R-CARBON 1/4W 10-J 100 RD-H
R 2W4	QX103P413 05	R-CARBON 1/4W 6.8K-J 682 RD-H
R 2W5	QX103P413 05	R-CARBON 1/4W 6.8K-J 682 RD-H
R 453	CP104P111 09	R-METAL 1W 270-J
R 454	QX103P418 00	R-CARBON 1/4W 1-J 010 RD-H
R 455	CP103P066 08	R-METAL-S 1/4W 6.2K-F 622 RN-H (DH)
R 456	CP103P066 07	R-METAL-S 1/4W 5.6K-F 562 RN-H
R 457	CP103P066 05	R-METAL-S 1/4W 4.7K-F 472RN-H
R 458	CP103P066 03	R-METAL-S 1/4W 3.9K-F 392 RN-H (DH)
R 459	CP103P066 07	R-METAL-S 1/4W 5.6K-F 562 RN-H
R 460	CP104P303 01	R-METAL 2W 0.56-F
R 461	CP103P066 07	R-METAL-S 1/4W 5.6K-F 562 RN-H
R 501	QX103P412 05	R-CARBON 1/4W 1K-J 102 RD-H
R 502	QX103P412 05	R-CARBON 1/4W 1K-J 102 RD-H
R 503	QX103P412 09	R-CARBON 1/4W 2.2K-J 222 RD-H
R 504	QX103P412 05	R-CARBON 1/4W 1K-J 102 RD-H
R 505	QX103P411 05	R-CARBON 1/4W 150-J 151 RD-H
R 506	QX103P412 09	R-CARBON 1/4W 2.2K-J 222 RD-H

ALL PARTS LIST

MODEL NO.: FE1250+(NSV1117STTKW)

SYMBOL NO.	PART NO.	DESCRIPTION/SPECIFICATION		
R 507	CP104P368 00	R-FUSE	1/2W 1-J	FMR
R 508	CP104P111 03	R-METAL	1W 82-J	
R 509	CP103P338 07	R-METAL	3W 3.9-J RHV	
R 510	CP103P338 07	R-METAL	3W 3.9-J RHV	
R 511	CP103P337 04	R-METAL	3W 0.33-J RHU	
R 512	CP104P110 06	R-METAL	1W 27-J	
R 513	CP103P338 07	R-METAL	3W 3.9-J RHV	
R 514	QX103P410 04	R-CARBON	1/4W 18-J	180 RD-H
R 560	CP104P111 04	R-METAL	1W 100-J	
R 561	CP103P331 04	R-METAL	3W 120-J RHU	
R 562	CP103P331 03	R-METAL	3W 100-J RHU	
R 563	CP103P412 03	R-CARBON	1/2W 680-J	
R 564	QX103P411 03	R-CARBON	1/4W 100-J	101 RD-H
R 565	QX103P413 07	R-CARBON	1/4W 10K-J	103 RD-H
R 566	QX103P412 09	R-CARBON	1/4W 2.2K-J	222 RD-H
R 567	QX103P411 03	R-CARBON	1/4W 100-J	101 RD-H
R 568	QX103P414 09	R-CARBON	1/4W 100K-J	104 RD-H
R 569	QX103P414 09	R-CARBON	1/4W 100K-J	104 RD-H
R 570	QX103P414 09	R-CARBON	1/4W 100K-J	104 RD-H
R 571	QX103P414 09	R-CARBON	1/4W 100K-J	104 RD-H
R 572	QX103P414 09	R-CARBON	1/4W 100K-J	104 RD-H
R 573	QX103P414 09	R-CARBON	1/4W 100K-J	104 RD-H
R 574	QX103P411 07	R-CARBON	1/4W 220-J	221 RD-H
R 575	QX103P411 07	R-CARBON	1/4W 220-J	221 RD-H
R 576	QX103P411 07	R-CARBON	1/4W 220-J	221 RD-H
R 577	QX103P411 07	R-CARBON	1/4W 220-J	221 RD-H
R 578	QX103P411 07	R-CARBON	1/4W 220-J	221 RD-H
R 579	QX103P411 07	R-CARBON	1/4W 220-J	221 RD-H
R 5A9	QX103P411 03	R-CARBON	1/4W 100-J	101 RD-H
R 5B0	QX103P411 03	R-CARBON	1/4W 100-J	101 RD-H
R 5C0	CP103P070 02	R-METAL-S	1/4W 110K-F	114 RN-H
R 5C1	CP103P067 01	R-METAL-S	1/4W 8.2K-F	822 RN-H
R 5C2	CP103P067 09	R-METAL-S	1/4W 18K-F 183 RN-H	
R 5C3	CP103P070 01	R-METAL-S	1/4W 100K-F	104 RN-H
R 5C4	QX103P414 09	R-CARBON	1/4W 100K-J	104 RD-H
R 5C5	QX103P411 03	R-CARBON	1/4W 100-J	101 RD-H
R 5D0	QX103P413 07	R-CARBON	1/4W 10K-J	103 RD-H
R 5D1	CP103P070 01	R-METAL-S	1/4W 100K-F	104 RN-H
R 5D2	QX103P411 03	R-CARBON	1/4W 100-J	101 RD-H
R 5D3	CP103P067 00	R-METAL-S	1/4W 7.5K-F	
R 5D4	CP103P068 09	R-METAL-S	1/4W 47K-F	473 RN-H
R 5D5	CP103P070 06	R-METAL-S	1/4W 160K-F	164 RN-H
R 5D6	QX103P414 05	R-CARBON	1/4W 47K-J	473 RD-H
R 5D7	QX103P414 03	R-CARBON	1/4W 33K-J	333 RD-H
R 5D8	QX103P414 04	R-CARBON	1/4W 39K-J	393 RD-H
R 5D9	QX103P413 07	R-CARBON	1/4W 10K-J	103 RD-H
R 5E1	QX103P411 03	R-CARBON	1/4W 100-J	101 RD-H
R 5F0	CP104P363 00	R-FUSE	1/2W 2.7K-J	FMR
R 5F1	QX103P415 05	R-CARBON	1/4W 330K-J 334 RD-H	
R 5F2	QX103P413 03	R-CARBON	1/4W 4.7K-J	472 RD-H
R 5F3	QX103P411 05	R-CARBON	1/4W 150-J	151 RD-H
R 5G0	CP104P360 07	R-FUSE	1/2W 33-J	FMR
R 5G1	CP104P360 09	R-FUSE	1/2W 47-J	FMR
R 5G2	CP103P338 09	R-METAL	3W 5.6-J RHU	
R 5G3	CP104P361 04	R-FUSE	1/2W 120-J	FMR
R 602	CP103P491 00	R-CHIP	1/16W 33-J	
R 603	CP103P491 00	R-CHIP	1/16W 33-J	
R 604	CP103P492 00	R-CHIP	1/16W 220-J	
R 605	CP103P490 04	R-CHIP	1/16W 10-J	
R 606	CP103P492 00	R-CHIP	1/16W 220-J	

ALL PARTS LIST

MODEL NO.: FE1250+(NSV1117STTKW)

SYMBOL NO.	PART NO.	DESCRIPTION/SPECIFICATION		
R 607	CP103P492 00	R-CHIP	1/16W 220-J	
R 608	CP103P492 00	R-CHIP	1/16W 220-J	
R 609	CP103P494 06	R-CHIP	1/16W 33K-J	
R 610	CP103P494 00	R-CHIP	1/16W 10K-J	
R 611	CP103P494 06	R-CHIP	1/16W 33K-J	
R 612	CP103P494 06	R-CHIP	1/16W 33K-J	
R 614	CP103P492 08	R-CHIP	1/16W 1.0K-J	
R 615	CP103P494 00	R-CHIP	1/16W 10K-J	
R 616	CP103P494 00	R-CHIP	1/16W 10K-J	
R 617	CP103P494 06	R-CHIP	1/16W 33K-J	
R 618	CP103P493 08	R-CHIP	1/16W 6.8K-J	
R 619	CP103P492 08	R-CHIP	1/16W 1.0K-J	
R 620	CP104P006 06	R-CHIP	1/16W 5.1K-F	1.6X0.8
R 621	CP103P492 08	R-CHIP	1/16W 1.0K-J	
R 623	CP103P497 01	R-CHIP	1/16W 0 JUMPER	
R 624	CP103P490 04	R-CHIP	1/16W 10-J	
R 625	CP103P492 08	R-CHIP	1/16W 1.0K-J	
R 626	CP103P492 08	R-CHIP	1/16W 1.0K-J	
R 627	CP103P493 06	R-CHIP	1/16W 4.7K-J	
R 628	CP103P492 08	R-CHIP	1/16W 1.0K-J	
R 629	CP104P004 08	R-CHIP	1/16W 910-F	1.6X0.8
R 630	CP103P496 06	R-CHIP	1/16W 1.5M-J	
R 631	CP103P492 06	R-CHIP	1/16W 680-J	
R 632	CP103P492 08	R-CHIP	1/16W 1.0K-J	
R 633	CP104P004 06	R-CHIP	1/16W 750-F	1.6X0.8
R 634	CP104P002 02	R-CHIP	1/16W 75-F	1.6X0.8
R 635	CP103P495 02	R-CHIP	1/16W 100K-J	
R 636	CP104P004 05	R-CHIP	1/16W 680-F	1.6X0.8
R 637	CP103P492 05	R-CHIP	1/16W 560-J	
R 638	CP103P492 00	R-CHIP	1/16W 220-J	
R 639	CP103P492 00	R-CHIP	1/16W 220-J	
R 640	CP103P492 00	R-CHIP	1/16W 220-J	
R 641	CP103P492 00	R-CHIP	1/16W 220-J	
R 642	CP104P007 03	R-CHIP	1/16W 10K-F	1.6X0.8
R 643	CP104P004 09	R-CHIP	1/16W 1K-F	1.6X0.8
R 644	CP104P004 05	R-CHIP	1/16W 680-F	1.6X0.8
R 645	CP104P011 00	R-CHIP	1/16W 240K-F	1.6X0.8
R 646	CP104P008 00	R-CHIP	1/16W 20K-F	1.6X0.8
R 647	CP104P012 01	R-CHIP	1/16W 680K-F	1.6X0.8
R 648	CP103P497 01	R-CHIP	1/16W 0 JUMPER	
R 649	CP104P013 00	R-CHIP	1/16W 1.6M-F	1.6X0.8
R 650	CP104P008 09	R-CHIP	1/16W 47K-F	1.6X0.8
R 651	CP104P008 09	R-CHIP	1/16W 47K-F	1.6X0.8
R 652	CP104P008 09	R-CHIP	1/16W 47K-F	1.6X0.8
R 653	CP104P008 09	R-CHIP	1/16W 47K-F	1.6X0.8
R 654	CP104P005 07	R-CHIP	1/16W 2.2K-F	1.6X0.8
R 655	CP104P005 07	R-CHIP	1/16W 2.2K-F	1.6X0.8
R 656	CP104P003 01	R-CHIP	1/16W 180-F	1.6X0.8
R 657	CP104P007 05	R-CHIP	1/16W 12K-F	1.6X0.8
R 658	CP104P008 09	R-CHIP	1/16W 47K-F	1.6X0.8
R 659	CP103P493 08	R-CHIP	1/16W 6.8K-J	
R 660	CP103P493 08	R-CHIP	1/16W 6.8K-J	
R 661	CP103P493 05	R-CHIP	1/16W 3.9K-J	
R 662	CP103P493 05	R-CHIP	1/16W 3.9K-J	
R 6A1	CP103P067 07	R-METAL-S	1/4W 15K-F	153 RN-H
R 6A2	QX103P413 02	R-CARBON	1/4W 3.9K-J	392 RD-H
R 6A3	CP103P067 05	R-METAL-S	1/4W 12K-F 123 RN-H	
R 6A4	CP103P069 05	R-METAL-S	1/4W 82K-F	823 RN-H
R 6A5	QX103P414 02	R-CARBON	1/4W 27K-J	273 RD-H
R 6A6	CP103P067 07	R-METAL-S	1/4W 15K-F	153 RN-H

ALL PARTS LIST

MODEL NO.: FE1250+(NSV1117STTKW)

SYMBOL NO.	PART NO.	DESCRIPTION/SPECIFICATION
R 6A7	QX103P413 02	R-CARBON 1/4W 3.9K-J 392 RD-H
R 6A8	QX103P414 02	R-CARBON 1/4W 27K-J 273 RD-H
R 6A9	CP103P067 07	R-METAL-S 1/4W 15K-F 153 RN-H
R 6B1	CP103P067 05	R-METAL-S 1/4W 12K-F 123 RN-H
R 6B2	CP103P069 05	R-METAL-S 1/4W 82K-F 823 RN-H
R 6B3	CP103P067 07	R-METAL-S 1/4W 15K-F 153 RN-H
R 6B4	CP103P068 08	R-METAL-S 1/4W 43K-F 433 RN-H
R 6B5	QX103P413 07	R-CARBON 1/4W 10K-J 103 RD-H
R 6B6	CP103P065 09	R-METAL-S 1/4W 2.7K-F 272 RN-H
R 6B7	CP103P068 03	R-METAL-S 1/4W 27K-F 273 RN-H
R 6B8	QX103P411 03	R-CARBON 1/4W 100-J 101 RD-H
R 6B9	QX103P411 03	R-CARBON 1/4W 100-J 101 RD-H
R 6C2	CP103P067 03	R-METAL-S 1/4W 10K-F 103 RN-H
R 6C3	QX103P413 07	R-CARBON 1/4W 10K-J 103 RD-H
R 6C4	CP103P068 07	R-METAL-S 1/4W 39K-F 393 RN-H (DH)
R 6C5	CP103P068 08	R-METAL-S 1/4W 43K-F 433 RN-H
R 6C6	CP103P068 06	R-METAL-S 1/4W 36K-F 363 RN-H (DH)
R 6C7	CP103P067 03	R-METAL-S 1/4W 10K-F 103 RN-H
R 6C8	CP103P068 02	R-METAL-S 1/4W 24K-F 243 RN-H
R 6C9	QX103P412 09	R-CARBON 1/4W 2.2K-J 222 RD-H
R 6D1	QX103P412 05	R-CARBON 1/4W 1K-J 102 RD-H
R 6D2	QX103P413 07	R-CARBON 1/4W 10K-J 103 RD-H
R 6D3	QX103P411 03	R-CARBON 1/4W 100-J 101 RD-H
R 6D4	QX103P411 03	R-CARBON 1/4W 100-J 101 RD-H
R 6D5	QX103P411 00	R-CARBON 1/4W 56-J 560 RD-H
R 6D6	QX103P411 03	R-CARBON 1/4W 100-J 101 RD-H
R 701	CP103P068 08	R-METAL-S 1/4W 43K-F 433 RN-H
R 702	CP103P330 08	R-METAL 3W 39-J RHU
R 703	CP103P330 08	R-METAL 3W 39-J RHU
R 704	QX330H509 09	SO-COPPER-WIRE 030N001 0.6
R 705	CP104P368 00	R-FUSE 1/2W 1-J FMR
R 706	CP103P070 01	R-METAL-S 1/4W 100K-F 104 RN-H
R 707	CP103P067 09	R-METAL-S 1/4W 18K-F 183 RN-H
R 708	QX103P413 07	R-CARBON 1/4W 10K-J 103 RD-H
R 709	CP103P066 04	R-METAL-S 1/4W 4.3K-F 432 RN-H
R 710	CP103P069 05	R-METAL-S 1/4W 82K-F 823 RN-H
R 711	CP103P068 07	R-METAL-S 1/4W 39K-F 393 RN-H (DH)
R 712	CP103P070 02	R-METAL-S 1/4W 110K-F 114 RN-H
R 713	CP103P068 05	R-METAL-S 1/4W 33K-F 333RN-H
R 714	CP103P070 01	R-METAL-S 1/4W 100K-F 104 RN-H
R 715	CP103P071 05	R-METAL-S 1/4W 390K-F 394 RN-H
R 716	CP104P050 02	R-CARBON 1/4W 1.5M-J
R 717	CP104P050 02	R-CARBON 1/4W 1.5M-J
R 718	QX103P413 07	R-CARBON 1/4W 10K-J 103 RD-H
R 719	QX103P412 09	R-CARBON 1/4W 2.2K-J 222 RD-H
R 720	CP103P413 02	R-CARBON 1/2W 3.9K-J
R 721	QX103P413 07	R-CARBON 1/4W 10K-J 103 RD-H
R 722	CP104P117 02	R-METAL 1W 0.22-J
R 723	CP104P117 02	R-METAL 1W 0.22-J
R 724	QX103P411 00	R-CARBON 1/4W 56-J 560 RD-H
R 725	QX103P413 07	R-CARBON 1/4W 10K-J 103 RD-H
R 726	QX103P413 07	R-CARBON 1/4W 10K-J 103 RD-H
R 727	QX103P413 01	R-CARBON 1/4W 3.3K-J 332 RD-H
R 728	CP103P064 09	R-METAL-S 1/4W 1K-F 102 RN-H
R 729	QX103P413 00	R-CARBON 1/4W 2.7K-J 272 RD-H
R 730	QX103P413 00	R-CARBON 1/4W 2.7K-J 272 RD-H
R 732	CP103P069 04	R-METAL-S 1/4W 75K-F 753RN-H
R 733	CP103P070 06	R-METAL-S 1/4W 160K-F 164 RN-H
R 734	QX330H509 09	SO-COPPER-WIRE 030N001 0.6
R 7A1	QX103P412 05	R-CARBON 1/4W 1K-J 102 RD-H

ALL PARTS LIST

MODEL NO.: FE1250+(NSV1117STTKW)

SYMBOL NO.	PART NO.	DESCRIPTION/SPECIFICATION
R 7A3	QX103P412 05	R-CARBON 1/4W 1K-J 102 RD-H
R 7A4	CP104P352 01	R-FUSE 1/4W 470-J FOR
R 7A5	CP104P113 09	R-METAL 1W 8.2K-J
R 7A6	CP104P351 02	R-FUSE 1/4W 82-J FMR
R 7A7	QX330H509 09	SO-COPPER-WIRE 030N001 0.6
R 7A8	QX330H509 09	SO-COPPER-WIRE 030N001 0.6
R 7A9	CP103P410 04	R-CARBON 1/2W 18-J
R 7B0	CP103P067 01	R-METAL-S 1/4W 8.2K-F 822 RN-H
R 7B1	QX103P412 05	R-CARBON 1/4W 1K-J 102 RD-H
R 7B3	CP103P415 05	R-CARBON 1/2W 330K-J
R 7B4	QX330H509 09	SO-COPPER-WIRE 030N001 0.6
R 7B5	QX330H509 09	SO-COPPER-WIRE 030N001 0.6
R 7B6	CP103P462 05	R-SURGE 1/2W 3.3K-J
R 801	CP103P068 04	R-METAL-S 1/4W 30K-F 303RN-H
R 802	CP103P068 01	R-METAL-S 1/4W 22K-F 223RN-H
R 811	CP103P070 01	R-METAL-S 1/4W 100K-F 104 RN-H
R 812	CP103P070 01	R-METAL-S 1/4W 100K-F 104 RN-H
R 813	CP103P071 09	R-METAL-S 1/4W 560K-F 564 RN-H
R 814	CP103P071 09	R-METAL-S 1/4W 560K-F 564 RN-H
R 821	CP103P070 01	R-METAL-S 1/4W 100K-F 104 RN-H
R 822	CP103P070 01	R-METAL-S 1/4W 100K-F 104 RN-H
R 823	CP103P071 09	R-METAL-S 1/4W 560K-F 564 RN-H
R 824	CP103P071 09	R-METAL-S 1/4W 560K-F 564 RN-H
R 831	CP103P070 01	R-METAL-S 1/4W 100K-F 104 RN-H
R 833	CP103P071 01	R-METAL-S 1/4W 270K-F 274 RN-H
R 834	QX330H509 09	SO-COPPER-WIRE 030N001 0.6
R 8A1	CP103P066 01	R-METAL-S 1/4W 3.3K-F
R 8A2	CP103P338 04	R-METAL 3W 2.2-J RHU
R 8A3	QX103P412 05	R-CARBON 1/4W 1K-J 102 RD-H
R 8A4	QX103P413 05	R-CARBON 1/4W 6.8K-J 682 RD-H
R 8A5	QX103P413 05	R-CARBON 1/4W 6.8K-J 682 RD-H
R 8A6	CP104P121 02	R-METAL 2W 68-J
R 8B1	CP103P066 01	R-METAL-S 1/4W 3.3K-F
R 8B2	CP103P338 00	R-METAL 3W 1-J RHU
R 8B3	QX103P412 05	R-CARBON 1/4W 1K-J 102 RD-H
R 8B4	QX103P413 05	R-CARBON 1/4W 6.8K-J 682 RD-H
R 8B5	QX103P413 05	R-CARBON 1/4W 6.8K-J 682 RD-H
R 8B6	CP104P121 02	R-METAL 2W 68-J
R 901	CP103P465 01	R-SURGE 1/2W 470K-J
R 904	CP103P071 07	R-METAL-S 1/4W 470K-F 474 RN-H
R 905	CP103P071 07	R-METAL-S 1/4W 470K-F 474 RN-H
R 906	CP103P070 09	R-METAL-S 1/4W 220K-F 224 RN-H
R 907	CP103P070 01	R-METAL-S 1/4W 100K-F 104 RN-H
R 908	CP103P067 03	R-METAL-S 1/4W 10K-F 103 RN-H
R 909	QX103P412 05	R-CARBON 1/4W 1K-J 102 RD-H
R 910	QX103P410 01	R-CARBON 1/4W 10-J 100 RD-H
R 911	QX103P414 01	R-CARBON 1/4W 22K-J 223 RD-H
R 912	QX103P410 02	R-CARBON 1/4W 12-J 120 RD-H
R 913	CP103P071 08	R-METAL-S 1/4W 510KF
R 914	CP103P071 08	R-METAL-S 1/4W 510KF
R 915	CP103P071 08	R-METAL-S 1/4W 510KF
R 916	CP103P068 02	R-METAL-S 1/4W 24K-F 243 RN-H
R 917	CP103P067 03	R-METAL-S 1/4W 10K-F 103 RN-H
R 918	CP103P071 03	R-METAL-S 1/4W 330K-F
R 919	CP103P071 03	R-METAL-S 1/4W 330K-F
R 920	CP103P070 05	R-METAL-S 1/4W 150K-F 154 RN-H
R 921	CP103P068 09	R-METAL-S 1/4W 47K-F 473 RN-H
R 922	CP104P127 03	R-METAL 2W 0.27-J
R 923	CP104P127 03	R-METAL 2W 0.27-J
R 926	CP104P124 05	R-METAL 2W 22K-J

ALL PARTS LIST

MODEL NO.: FE1250+(NSV1117STTKW)

SYMBOL NO.	PART NO.	DESCRIPTION/SPECIFICATION		
R 927	CP104P124 05	R-METAL	2W 22K-J	
R 928	CP103P065 05	R-METAL-S	1/4W 1.8K-F	182 RN-H
R 929	QX103P418 06	R-CARBON	1/4W 3.3-J	3R3 RD-H
R 930	CP104P200 02	R-CEMENT	2W 0.27-J	
R 931	QX103P412 03	R-CARBON	1/4W 680-J	681 RD-H
R 932	CP103P066 01	R-METAL-S	1/4W 3.3K-F	
R 933	QX103P413 07	R-CARBON	1/4W 10K-J	103 RD-H
R 934	QX103P413 07	R-CARBON	1/4W 10K-J	103 RD-H
R 935	QX103P412 05	R-CARBON	1/4W 1K-J	102 RD-H
R 936	QX103P413 07	R-CARBON	1/4W 10K-J	103 RD-H
R 937	QX103P413 07	R-CARBON	1/4W 10K-J	103 RD-H
R 938	QX103P411 09	R-CARBON	1/4W 330-J	331 RD-H
R 945	QX103P378 06	R-FUSE	1/4W 3.3-J	3R3 RNF-H
R 946	QX103P413 07	R-CARBON	1/4W 10K-J	103 RD-H
R 948	QX103P411 09	R-CARBON	1/4W 330-J	331 RD-H
R 949	CP104P124 01	R-METAL	2W10K-J	
R 950	CP104P124 01	R-METAL	2W10K-J	
R 951	CP103P415 02	R-CARBON	1/2W 180K-J	
R 952	QX103P413 04	R-CARBON	1/4W 5.6K-J	562 RD-H
R 953	QX103P414 08	R-CARBON	1/4W 82K-J	823 RD-H
R 954	QX103P413 06	R-CARBON	1/4W 8.2K-J	822 RD-H
R 955	QX103P413 08	R-CARBON	1/4W 12K-J	123 RD-H
R 956	QX103P413 07	R-CARBON	1/4W 10K-J	103 RD-H
R 957	QX103P413 03	R-CARBON	1/4W 4.7K-J	472 RD-H
R 958	QX103P413 03	R-CARBON	1/4W 4.7K-J	472 RD-H
R 959	QX103P413 07	R-CARBON	1/4W 10K-J	103 RD-H
R 960	CP103P069 01	R-METAL-S	1/4W 56K-F	
R 961	CP103P068 07	R-METAL-S	1/4W 39K-F	393 RN-H (DH)
R 962	QX103P413 07	R-CARBON	1/4W 10K-J	103 RD-H
R 963	CP103P065 03	R-METAL-S	1/4W 1.5K-F	152 RN-H
R 964	QX103P412 05	R-CARBON	1/4W 1K-J	102 RD-H
R 965	CP103P068 03	R-METAL-S	1/4W 27K-F	273 RN-H
R 976	QX103P412 05	R-CARBON	1/4W 1K-J	102 RD-H
R 981	CP103P411 01	R-CARBON	1/2W 68-J	
R 982	QX103P412 05	R-CARBON	1/4W 1K-J	102 RD-H
R 983	QX103P413 07	R-CARBON	1/4W 10K-J	103 RD-H
R 984	CP103P414 02	R-CARBON	1/2W 27K-J	
R 9A0	QX103P411 03	R-CARBON	1/4W 100-J	101 RD-H
R 9A1	CP103P411 07	R-CARBON	1/2W 220-J	
***** POSISTOR *****				
RP901	CP265P120 01	POSISTOR	PTH451A4R5Q23	(MI)
***** RELAY *****				
RY901	CP287P044 01	RELAY	P040-1/P039-1	
***** SWITCH *****				
SW1A0	CP432P028 01	SW-TACT	KSH0612BT	
SW1A1	CP432P028 01	SW-TACT	KSH0612BT	
SW1A2	CP432P028 01	SW-TACT	KSH0612BT	
SW1A3	CP432P028 01	SW-TACT	KSH0612BT	
SW1A4	CP432P028 01	SW-TACT	KSH0612BT	
SW1A5	CP432P028 01	SW-TACT	KSH0612BT	
SW1A7	CP432P028 01	SW-TACT	KSH0612BT	
SW901	CP432P020 01	SW-PUSH	ESB92S21B	
***** TRANS *****				
T 501	CP336P033 01	TRANS-HORIZ-DRIVE	(MI)	
T 550	CP332P035 03	TRANS-HORIZ-OUT	0133016700	(MI)
T 701	CP334P066 01	TRANS-FLYBACK	MSU1FVH004	(MD)
T 7A1	CP409P087 01	TRANS-DBF	0133013000	(MI)
T 901	CP350P523 01	TRANS-POWER	7101-0295	(MI)
T 902	CP350P524 01	TRANS-POWER	P-ST19E	(MI)
***** THERMISTOR *****				

ALL PARTS LIST

MODEL NO.: FE1250+(NSV1117STTKW)

SYMBOL NO.	PART NO.	DESCRIPTION/SPECIFICATION		
TH101	CP265P114 01	THERMISTOR	NRD3103K400K03FMT	
TH901	CP265P113 02	THERMISTOR	E100L14D325JFZ00	
*** CRT ***				
	0381F06B	M51LRY32X	CT251B022-4	ITC
*** PLASTIC PARTS ***				
	CP702A014 03	CONNECTOR-COVER	ABS 500	NSV1117K (MI)
	CP706A001 02	PLATE-LOGO	ABS 500	NSV1107K-NE(MI)
	CP720B098 01	BEZEL-UNIT	CP700A250-1	NSV1117K (ME)
	CP721B055 03	BACK-COVER-UNIT	CP700A267-2	NSV1117K-NE(ME)
	CP722B024 02	TILT-STAND-UNIT	CP770A036-2	NSV1107K-NE(ME)
*** ASSY PCB ***				
	CT920A337 06	ASSY-PCB-MAIN (WITH DEFL-SUB)		
	CT920B576 06	ASSY-PCB-POWER		
	CT920B577 06	ASSY-PCB-VIDEO		
	CT920C253 06	ASSY-PCB-CRT		
	CT920C254 06	ASSY-PCB-TACT-SW		
	CT920C255 06	ASSY-PCB-POWER-SW		
*** Others ***				
E 200	CP442P004 01	EARTH-TERMINAL	TP00370-41	
E 201	CP442P004 01	EARTH-TERMINAL	TP00370-41	
E 202	CP442P004 01	EARTH-TERMINAL	TP00370-41	
E 203	CP442P004 01	EARTH-TERMINAL	TP00370-41	
SP200	CP570D045 01	SPRING	C5210R-H T0.2	NSV1107K
VR5A1	CP127C031 07	VR-SEMIFIXED	1/5W B-3K	
X 101	CP285P008 04	CRYSTAL	HC49/U-S*24MHZ	
	CP077W001 01	SILICON-COMPOUND	CP077N001/CP077N002	
	CP077W001 01	SILICON-COMPOUND	CP077N001/CP077N002	
	CP081X004 01	SILICONE-GUM	CP081N001 CP081N003	
	CP081X004 01	SILICONE-GUM	CP081N001 CP081N003	
	CP081X004 01	SILICONE-GUM	CP081N001 CP081N003	
	CP081X004 01	SILICONE-GUM	CP081N001 CP081N003	
	CP223D073 01	INSULATOR	SR1825P T0.45	NSV1107K (MI)
	CP223D074 01	INSULATOR-TOP	FORMEX-18 T=0.46	NSV1107K (MI)
	CP242C286 07	SIGNAL-CABLE	SC-B110	
	CP246B183 03	LEAD-CONNECTOR	UL1007 AWG26	NSV1107K (MT)
	CP246B183 04	LEAD-CONNECTOR	UL1007 AWG26	NSV1107K (MT)
	CP246B183 05	LEAD-CONNECTOR	UL1007 AWG26	NSV1107K (MT)
	CP246B183 06	LEAD-CONNECTOR	UL1672 AWG22	NSV1107K (MT)
	CP246B183 01	LEAD-CONNECTOR	UL1007 AWG26	NSV1107K (MT)
	CP246B183 02	LEAD-CONNECTOR	UL1007 AWG26	NSV1107K (MT)
	CP246C343 02	PIN-LEAD	TFW9105K (MI)	
	CP246C377 06	LEAD	NSB1107U (MT)	
	CP246C394 07	TERMINAL-LEAD	PVC-UL UL1015 AWG16	NSV1107K (MT)
	CP246C429 01	FFC-CABLE	19P	NSV1107K (MT)
	CP246C430 01	LEAD-CONNECTOR	NSV1107K (MT)	
	CP246C431 01	LEAD-CONNECTOR	NSV1107K (MT)	
	CP338P013 02	CP-ASSY	TP-13000MZ2	
	CP409B031 01	COIL-SET	NSV1107K (MT)	
	CP452P253 01	NOISE-FILTER	SUP-L3G-E-3B	TFA1105U (MT)
	CP540C004 03	LEAD-CLAMPER	CKN-10	
	CP540C013 03	EDGE-SADDLE	EDS-1208U	
	CP540C051 01	EDGE-SADDLE	PA66	NSV1107K (MI)
	CP540D005 03	LEAD-CLAMPER	NYLON 6	(MI)
	CP540D023 03	BAND-RIVET	NYLON 6	NAD-06 (MI)
	CP540D050 02	LEAD-CLAMPER	NYLON6	THN9105K (MI)
	CP540D076 01	CLAMPER	PA66	NSV1107K (MI)
	CP540D076 01	CLAMPER	PA66	NSV1107K (MI)

ALL PARTS LIST

MODEL NO.: FE1250+(NSV1117STTKW)

SYMBOL NO.	PART NO.	DESCRIPTION/SPECIFICATION	
	CP549D005 02	CARD-SPACER	(MI)
	CP570C010 01	SPRING	SUS304-CSPH T0.2 NSV1107K
	CP570C010 01	SPRING	SUS304-CSPH T0.2 NSV1107K
	CP570C010 02	SPRING	SUS304-CSPH T0.2 NSV1107K
	CP580A106 01	TILT-BASE	SECC-C E16/E16 T0.8 NSV1107K
	CP580A108 01	COVER-VIDEO	A1100P-H24 T0.5 NSV1107K
	CP580A109 01	SHIELD-TOP	A1100P-H24 T0.5 NSZ2107U
	CP580A117 01	SHIELD-POWER	A5052P-H32 T0.5 NSV1107K
	CP580B088 01	CONNECTOR-PLATE	SECC-C E16/E16 T0.8 NSV1107K
	CP590B077 01	RADIATOR-HV	A1100P-H24 T2.0 NSV1107K
	CP590C126 04	RADIATOR-FIN	A6063S-T5 NUH1107U
	CP590C160 05	RADIATOR-FIN	A6063S-T5 NSV1107K
	CP590C160 06	RADIATOR-FIN	A6063S-T5 NSV1107K
	CP590C173 01	RADIATOR-FIN	A6063S-T5 NUH1107U
	CP590D075 01	RADIATOR-TR	TERNE-SHEET T0.8 FFD6505K
	CP590D090 01	RADIATOR-F	SILVER-TOP T1.0 TFA1105U
	CP590D090 02	RADIATOR-F	SILVER-TOP T1.0 NUH1107U
	CP590D094 01	RADIATOR-FIN	A6063S-T5 NUH1107U
	CP590D095 02	RADIATOR	SILVER-TOP NSV1107K
	CP593A160 01	REAR-PLATE	A1100P-H24 T1.5 NSZ2107U
	CP593B151 01	HOLDER-TOP	SPTE-2.8/2.8 T0.25 NSV1107K
	CP593D203 01	HOLDER-BOTTOM	SECC-C E16/E16 T0.8 NSV1107K
	CP593D205 01	MIRROR-LED	SPTE 2.8/2.8 T0.25 NSV1117K
	CP620A031 01	FRAME-BOTTOM	SECC-C E16/16 T1.0 NSV1107K
	CP623A023 01	FRAME-POWER	A5052P-H32 T1.0 NSZ2107U
	CP626A022 01	FRAME-CRT-TB	SECC-C E16/E16 T0.8 NSV1107K
	CP626A023 01	FRAME-CRT-SIDE	SECC-C E16/E16 T0.8 NSV1107K
	CP641C066 01	LEVER-POWER	ABS 500 NSV1107K (MI)
	CP669D016 02	SCREW-TB-BIND-W	3X8 26AA005+BLACK
	CP669D033 01	SCREW-TB-SOLDER	3X8 SOLDER 3X8
	CP669D041 01	SCREW-HEX	JFS-4S-B1WM FS6605K
	CP669D074 01	SCREW-TB-SEMS	3X8 LXM510J
	CP669D074 01	SCREW-TB-SEMS	3X8 LXM510J
	CP669D074 01	SCREW-TB-SEMS	3X8 LXM510J
	CP669D080 01	SCREW	5X20 NFN8715F
	CP669D103 01	SCREW-TB-CAP	SCREW-TB-CAP
	CP669D103 01	SCREW-TB-CAP	SCREW-TB-CAP
	CP669D103 01	SCREW-TB-CAP	SCREW-TB-CAP
	CP669D103 01	SCREW-TB-CAP	SCREW-TB-CAP
	CP669D103 01	SCREW-TB-CAP	SCREW-TB-CAP
	CP669D103 01	SCREW-TB-CAP	SCREW-TB-CAP
	CP669D502 02	SCREW-SEMS	M3X0.5-10
	CP669D502 02	SCREW-SEMS	M3X0.5-10
	CP677D001 01	EYELET	BSR T0.2
	CP677D001 01	EYELET	BSR T0.2
	CP677D001 01	EYELET	BSR T0.2
	CP677D020 01	EYELET	2.0X3.0X3.3 0.2T
	CP677D020 01	EYELET	2.0X3.0X3.3 0.2T
	CP677D020 01	EYELET	2.0X3.0X3.3 0.2T
	CP677D020 02	EYELET	1.6X3.0X3.0 0.2T
	CP677D020 02	EYELET	1.6X3.0X3.0 0.2T
	CP775C360 02	RATING-LABEL	POLYESTER-TACK T0.1 NSV1117-NE
	CP803A100 01	CUSHION	FOAMED-P.S P=0.017 NSV1107K
	CP831C022 01	PACKING-BAG	POLYETHYLENE-SHEET-TTFA1105U
	CP850D268 01	LABEL-CAUTION	WHITE-PAPER 70KG NUH1107U
	QX096Z466 09	CARTON-TAPE	75X500M
	QX330H509 09	SO-COPPER-WIRE	030N001 0.6
	QX330H509 09	SO-COPPER-WIRE	030N001 0.6
	QX330H509 09	SO-COPPER-WIRE	030N001 0.6

ALL PARTS LIST

MODEL NO.: FE1250+(NSV1117STTKW)

SYMBOL NO.	PART NO.	DESCRIPTION/SPECIFICATION
	QX330H509 09	SO-COPPER-WIRE 030N001 0.6
	QX540D036 01	LEAD-CLAMPER * (MI)
	QX540D036 01	LEAD-CLAMPER * (MI)
	QX540D036 01	LEAD-CLAMPER NYLON-6 CM1017 (MI)
	QX540D036 01	LEAD-CLAMPER NYLON-6 CM1017 (MI)
	QX540D111 01	LEAD-CLAMPER NYLON CM1017 (MI)
	QX669D220 02	SCREW-TB * 3X8
	QX669D221 02	SCREW-TB 4X8 46LA005
	QX669D221 04	SCREW-TB
	QX669D221 06	SCREW-TB 46LA005 4X16
	RX669D171 03	SCREW-SEMS M3X0.5-12
	RX669D171 05	SCREW-SEMS-W M4X0.7-8
FE1250+ for US		
	CP242C229 06	AC-POWER-CORD (MT)
	CP802C384 02	PACKING-CASE NSV1117K-NE
	CP859C214 02	ACCESSORY CP871C200-8 NSV1117K
FE1250+ for EU		
	CP242C289 02	AC-POWER-CORD (MT)
	CP802C384 03	PACKING-CASE NSV1117K-NE
	CP859C214 03	ACCESSORY CP871C201-1 NSV1117K-NE