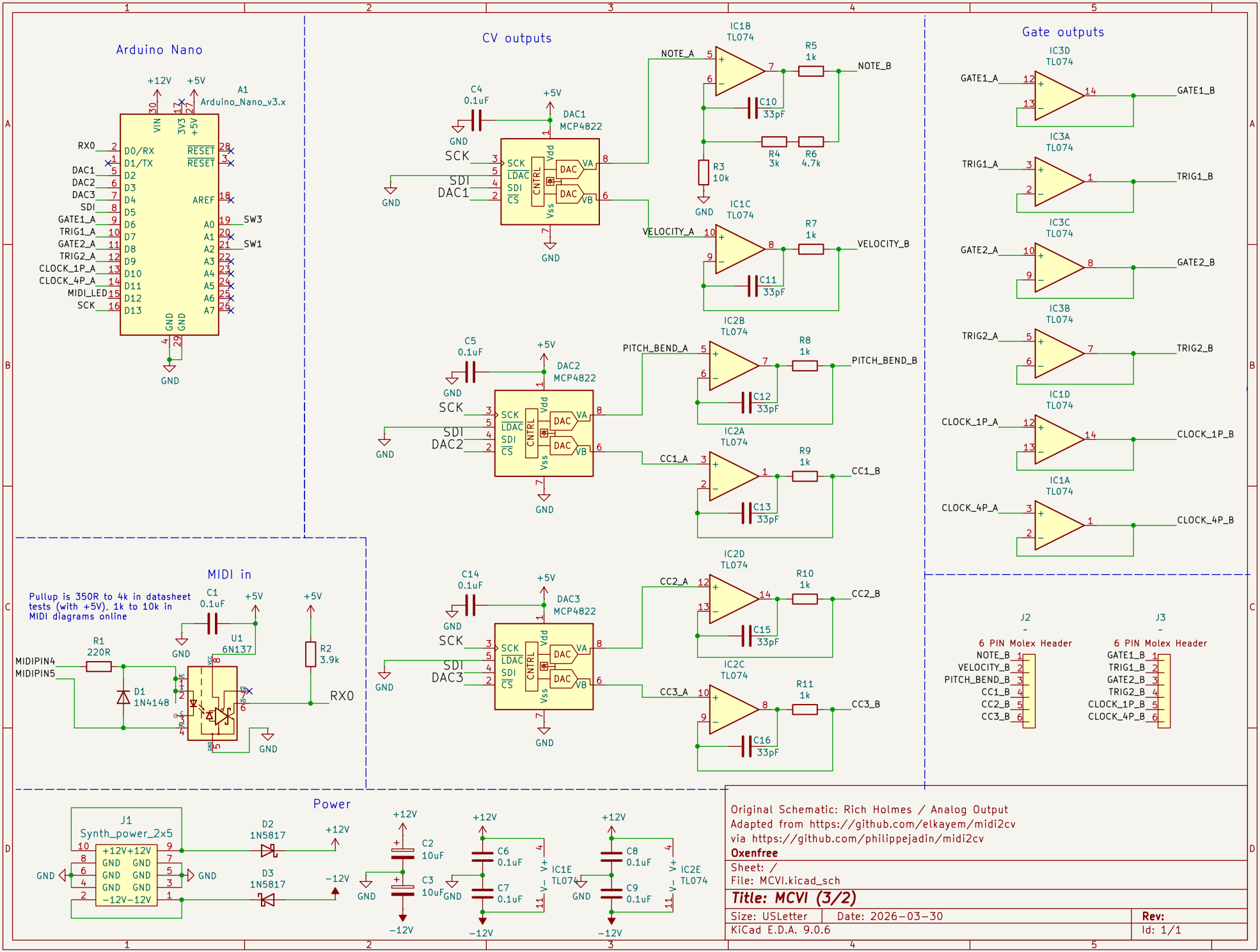
Arduino Nano
A1
Arduino_Nano_v3.x
+12V
+5V
VIN
3V3
RX0
DAC1
DAC2
DAC3
SDI
GATE1_A
TRIG1_A
GATE2_A
TRIG2_A
CLOCK_1P_A
CLOCK_4P_A
MIDI_LED
SCK
D0/RX
D1/TX
RESET
AREF
SW3
SW1
GND
CV outputs
C4
0.1uF
DAC1
MCP4822
SCK
SDI
LDAC
CS
CNTRL
Vdd
Vss
DAC
VA
VB
IC1B
TL074
NOTE_A
NOTE_B
R5
1k
C10
33pF
R4
3k
R6
4.7k
R3
10k
IC1C
TL074
VELOCITY_A
VELOCITY_B
R7
1k
C11
33pF
C5
0.1uF
DAC2
MCP4822
IC2B
TL074
PITCH_BEND_A
PITCH_BEND_B
R8
1k
C12
33pF
IC2A
TL074
CC1_A
CC1_B
R9
1k
C13
33pF
C14
0.1uF
DAC3
MCP4822
IC2D
TL074
CC2_A
CC2_B
R10
1k
C15
33pF
IC2C
TL074
CC3_A
CC3_B
R11
1k
C16
33pF
Gate outputs
IC3D
TL074
GATE1_A
GATE1_B
IC3A
TL074
TRIG1_A
TRIG1_B
IC3C
TL074
GATE2_A
GATE2_B
IC3B
TL074
TRIG2_A
TRIG2_B
IC1D
TL074
CLOCK_1P_A
CLOCK_1P_B
IC1A
TL074
CLOCK_4P_A
CLOCK_4P_B
MIDI in
Pullup is 350R to 4k in datasheet
tests (with +5V), 1k to 10k in
MIDI diagrams online
C1
0.1uF
U1
6N137
R1
220R
MIDIPIN4
MIDIPIN5
D1
1N4148
R2
3.9k
RX0
J2
6 PIN Molex Header
NOTE_B
VELOCITY_B
PITCH_BEND_B
CC1_B
CC2_B
CC3_B
J3
6 PIN Molex Header
GATE1_B
TRIG1_B
GATE2_B
TRIG2_B
CLOCK_1P_B
CLOCK_4P_B
Power
J1
Synth_power_2x5
+12V+12V
GND GND
GND GND
GND GND
-12V-12V
D2
1N5817
D3
1N5817
+12V
-12V
C2
10uF
C3
10uF
C6
0.1uF
C7
0.1uF
IC1E
TL074
C8
0.1uF
C9
0.1uF
IC2E
TL074
V+
V-
Original Schematic: Rich Holmes / Analog Output
Adapted from https://github.com/elkayem/midi2cv
via https://github.com/philippejadin/midi2cv
Oxenfree
Sheet: /
File: MCVI.kicad_sch
Title: MCVI (3/2)
Size: USLetter
Date: 2026-03-30
Rev:
KiCad E.D.A. 9.0.6
Id: 1/1